BEFORE THE ARIZONA CORPORATION COMMISSION

RECEIVED

2002 MAY -1 P 4: 57

AZ CORP COMMISSION
DOCUMENT CONTROL

WILLIAM A. MUNDELL
Chairman
JIM IRVIN
Commissioner
MARC SPITZER
Commissioner

IN THE MATTER OF QWEST CORPORATION'S COMPLIANCE WITH SECTION 271 OF THE TELECOMMUNICATIONS ACT OF 1996

DOCKET NO. T-00000A-97-0238

NOTICE OF FILING

The Arizona Corporation Commission Staff ("Staff"), by its undersigned attorneys, hereby files Staff's Supplemental Report on Checklist Item 2 which addresses CGE&Y's Final OSS Test Report.

RESPECTFULLY SUBMITTED this 1st day of May 2002.

Maureen S. Scott
Attorney, Legal Division
Arizona Corporation Commission
1200 West Washington Street
Phoenix, Arizona 85007
Telephone: (602) 542-6022
Facsmile: (602) 542-4870
E-mail: maureenscott@cc.state.az.us

The original and ten (10) copies of the foregoing were filed this 1st day of May 2002, with:

Docket Control
Arizona Corporation Commission
1200 West Washington Street
Phoenix, Arizona 85007

Copies of the foregoing were mailed and/or hand-delivered this 2nd day of May 2002, to:

Charles Steese
Andrew Crain
QWEST Communications, Inc.
1801 California Street, #5100
Denver, Colorado 80202

Maureen Arnold
QWEST Communications, Inc.
3033 N. Third Street, Room 1010
Phoenix, Arizona 85012

Michael M. Grant
Gallagher and Kennedy
2575 E. Camelback Road
Phoenix, Arizona 85016-9225

Timothy Berg
Fennemore Craig
3003 N. Central Ave., Suite 2600
Phoenix, Arizona 85016

Nigel Bates
Electric Lightwave, Inc.
4400 NE 77th Avenue
Vancouver, Washington 98662

Brian Thomas, VP Reg. - West
Time Warner Telecom, Inc.
520 SW 6th Avenue, Suite 300
Portland, Oregon 97204

Richard P. Kolb, VP-Reg. Affairs
OnePoint Communications
Two Conway Park
150 Field Drive, Suite 300
Lake Forest, Illinois 60045

Eric S. Heath
Sprint Communications Co.
100 Spear Street, Suite 930
San Francisco, CA 94105

Thomas H. Campbell
Lewis & Roca
40 N. Central Avenue
Phoenix, Arizona 85007

Andrew O. Isar
TRI
4312 92nd Avenue, N.W.
Gig Harbor, Washington 98335

Michael W. Patten
Roshka Heyman & DeWulf
One Arizona Center
400 East Van Buren, Suite 800
Phoenix, Arizona 85004

Charles Kallenbach
American Communications Services, Inc.
131 National Business Parkway
Annapolis Junction, Maryland 20701

Thomas F. Dixon
MCI Telecommunications Corp.
707 17th Street, #3900
Denver, Colorado 80202

Kevin Chapman
Director-Regulatory Relations
SBC Telecom, Inc.
300 Convent Street, Rm. 13-Q-40
San Antonio, TX 78205

Richard S. Wolters
AT&T & TCG
1875 Lawrence Street, Room 1575
Denver, Colorado 80202

Joyce Hundley
United States Department of Justice
Antitrust Division
1401 H Street NW, Suite 8000
Washington, DC 20530

Joan Burke
Osborn Maledon
2929 N. Central Avenue, 21st Floor
P.O. Box 36379
Phoenix, Arizona 85067-6379

Scott S. Wakefield, Chief Counsel
RUCO
2828 N. Central Avenue, Suite 1200
Phoenix, Arizona 85004

Rod Aguilar
AT&T
795 Folsom St., #2104
San Francisco, CA 94107-1243

Daniel Waggoner
Davis Wright Tremaine
2600 Century Square
1501 Fourth Avenue
Seattle, WA 98101-1688

Raymond S. Heyman
Roshka Heyman & DeWulf
One Arizona Center
400 East Van Buren, Suite 800
Phoenix, Arizona 85004

Diane Bacon, Legislative Director
Communications Workers of America
5818 North 7th Street, Suite 206
Phoenix, Arizona 85014-5811

Gena Doyscher
Global Crossing Local Services, Inc.
1221 Nicollet Mall
Minneapolis, MN 55403-2420

Karen L. Clauson
Eschelon Telecom, Inc.
730 Second Avenue South, Suite 1200
Minneapolis, MN 55402

Mark P. Trinchero
Davis, Wright Tremaine
1300 SW Fifth Avenue, Suite 2300
Portland, OR 97201

Traci Grundon
Davis, Wright & Tremaine LLP
1300 S.W. Fifth Avenue
Portland, OR 97201

Bradley Carroll, Esq.
Cox Arizona Telcom, L.L.C.
20401 North 29 Avenue
Phoenix, AZ 85027

Mark N. Rogers
Excell Agent Services, L.L.C.
2175 W. 14th Street
Tempe, AZ 85281

Barbara P. Shever
LEC Relations Mgr.-Industry Policy
Z-Tel Communications, Inc.
601 S. Harbour Island Blvd., Suite 220
Tampa, FL 33602

Jonathan E. Canis
Michael B. Hazzard
Kelly Drye & Warren L.L.P.
1200 19th Street, NW, Fifth Floor
Washington, D.C. 20036

Ms. Andrea P. Harris
Sr. Manager, Reg.
Allegiance Telecom, Inc.
2101 Webster, Suite 1580
Oakland, California 94612

Dennis D. Ahlers, Sr. Attorney
Eschelon Telecom, Inc.
730 Second Ave. South, Ste. 1200
Minneapolis, MN 55402

Garry Appel, Esq.
TESS Communications, Inc.
1917 Market Street
Denver, CO 80202

Todd C. Wiley Esq. for
COVAD Communications Co.
Gallagher and Kennedy
2575 East Camelback Road
Phoenix, Arizona 85016-9225

K. Megan Doberneck, Esq. for
COVAD Communications Co.
7901 Lowry Blvd
Denver, CO 80230

Steven J. Duffy
Ridge & Isaacson P.C.
3101 N. Central Ave., Suite 1090
Phoenix, AZ 85012-2638

Viola R. Kizis
Secretary to Maureen A. Scott

IN THE MATTER OF QWEST CORPORATION'S SECTION 271 APPLICATION

ACC Docket No. T-00000A-97-0238

SUPPLEMENTAL REPORT AND STAFF RECOMMENDATION ON QWEST'S COMPLIANCE

WITH

CHECKLIST ITEM NO. 2: ACCESS TO UNBUNDLED NETWORK ELEMENTS

OPERATIONAL SUPPORT SYSTEM REQUIREMENTS

MAY 1, 2002

I. FINDINGS OF FACT

A. PROCEDURAL HISTORY

1. On February 8, 1999, US West, now Qwest, filed notice with the Arizona Corporation Commission (ACC) indicating that it intended to file an application with the Federal Communications Commission (FCC), pursuant to Section 271 of the Telecommunications Act of 1996 (1996 Act), to provide interLATA telecommunications services that originate in Arizona.

2. The ACC's Hearing Division issued a Procedural Order on June 8, 1999, in Docket No. T-00000A-97-0238. This Procedural Order required interested parties to submit comments on appropriate Operations Support Systems (OSS) performance standards that could be used to assess whether Qwest satisfies the expressed requirements of Section 271 pertaining to non-discriminatory access to its OSS. On the basis of responses to the June 8, 1999 Order, a second Procedural Order was issued by the ACC on July 2, 1999 that prescribed a series of open and collaborative workshops to determine appropriate OSS performance standards for Qwest.

3. The ACC's initial scope of testing included a limited evaluation of the functionality of Qwest's OSS. On the basis of the July 2, 1999 Order, the ACC expanded its scope of work to include preparation of a Draft OSS Master Test Plan (MTP) defining a comprehensive evaluation of Qwest's OSS. The Draft MTP was distributed to all participants in the Arizona 271 proceeding for comment.

4. A Request for Proposal (RFP) to conduct a comprehensive Third Party Test of Qwest's OSS was issued by the ACC. Interested parties were invited to comment on the proposals submitted, and the ACC subsequently conducted a series of vendor interviews. Selection of an independent Test Administrator (TA) and a Test Transaction Generator (the Pseudo-CLEC) were made in the fourth quarter of 1999. Cap Gemini Telecom Media & Networks U.S., Inc. was chosen to be the TA. As a result of a subsequent merger Cap Gemini is now known as Cap Gemini Ernst & Young Telecom, Media & Networks ("CGE&Y"). Hewlett Packard (HP) was chosen to be the Pseudo-CLEC.

5. Participant comments and suggestions concerning the Draft MTP provided the basis for agendas for the first series of Workshops. Competitive Local Exchange Carriers ("CLECs") appearing at the Workshops included AT&T, WorldCom, Sprint, Electric Lightwave, Inc.(ELI) e.spire Communications, Inc., Eschelon Telecommunications of Arizona, Allegiance Telecommunications, and Z-Tel Communications, Inc.

6. During these initial Workshops, the parties established the Test Advisory Group (TAG) that was comprised all interested CLECs, Qwest, Staff, its Consultant

(DCI), CGE&Y, and HP. The TAG was designed to serve as a forum where OSS testing issues could be discussed and resolved on an ongoing basis.

7. The TAG met at least twice per month from its inception to the present. During the course of the Qwest Arizona OSS Test, more than 50 TAG meetings have been held, with each providing the CLECs and Qwest with an opportunity to raise issues in an open forum. It established and implemented processes for recording and tracking issues that arose, and for initiating and completing Action items. In addition, two sub-committees of the TAG were established: a subcommittee on Statistics and one for Capacity Testing. The former ensured that test sample sizes led to statistically valid results. The latter sub-committee focused on the design of the Capacity Test. Any TAG member was allowed to take to "impasse" for ACC Staff resolution, any testing issues on which the TAG members could not reach agreement. Approximately 10 issues, out of the hundreds addressed, were taken to impasse for Staff resolution.

8. Workshops with TAG participation were conducted by CGE&Y to finalize the MTP. Through these workshops and associated TAG meetings, a number of significant changes to the MTP, were agreed upon and adopted by the TA based on CLEC inputs and comments. CGE&Y also conducted workshops to allow for maximum input and comment on a Test Standards Document (TSD), which contained a more detailed rendition of each test and how it would be conducted. Explicit "Entrance" standards for commencing and "Exit" standards for concluding each of the tests were established as effective control mechanisms. The TSD also provided detailed Test Cases within the Scenarios, Scripts and other exact specifications as to how the tests would be conducted.[1]

9. The MTP also provided that CGE&Y would initially conduct an extensive Performance Measurement Audit (PMA). The TAG agreed that the PMA would be conducted in accordance with Government Accounting Office (GAO) standards and would determine whether Qwest was accurately calculating and reporting its performance in accordance with the PID. The audit began in August of 2000 and was conducted in 3 phases. Table 3 of the Final PMA report lists the measures that were audited during each particular phase of the PMA audit. The audit report also specifies which version of the PID was in effect at the time each measure was undergoing the audit process.

10. The other four phases of the OSS test included the Functionality Test, the Retail Parity Test, the Relationship Management Test and the Capacity Test. Phase I of the Functionality Test began in December 2000 and ended in June, 2001. The Relationship Management Test was commenced immediately upon Pseudo-CLEC start-up and observations regarding Qwest's interactions with the CLECs continued throughout the remainder of the test. The Retail Parity Test consisted of two phases which began on August 28, 2000 and February 12, 2001. The Capacity Test was conducted on August 10, 2001. Functionality and Retail Parity retesting was conducted in the fall of 2001.

---

[1] The MTP and TSD are discussed in more detail below.

11. The TAG agreed that after each part of the OSS Test was conducted, CGE&Y would issue interim reports containing its initial findings. After each interim report was issued, the ACC held workshops to allow TAG members and other 271 participants to question CGE&Y and HP on their interim findings and test conclusions. In Staff's opinion, the interim workshops were critical to successful resolution of the OSS Test. The interim workshops allowed test deficiencies and the parties' concerns to be identified early so that they could be resolved in a timely fashion. CGE&Y and Staff were able to resolve a significant number of the concerns identified with each test due to the interim workshop process.

12. Interim reports on the Retail Parity, Relationship Management, Capacity Test and Functionality Test were issued on July 5, 2001, September 27, 2001, October 1, 2001 and October 11, 2001 respectively. Workshops were held on the Retail Parity Interim Report on August 7-9, 2001, the Relationship Management Interim Report on October 9-11, 2001, the Capacity Test Interim Report on October 25-26, 2001, and the Functionality Test Interim Report on November 27-29, 2001. Interim Reports on the PMA were issued on October 6, 2000 and December 8, 2000. In addition, CGE&Y issued a Draft Final Report (covering all phases of the test) on December 21, 2001. A Workshop was held on January 28-31, 2002 to discuss the Draft Final Report. CGE&Y issued its Final Report on March 29, 2002. A final workshop was held on April 17-18, 2002 to discuss the Report and the Supplemental Reports issued by CGE&Y and HP.

13. Following is a chart providing quantitative information about each of these workshops:

Test Section	Workshop Length	Pre-Filed Questions
Retail Parity Evaluation	3 days	161
Relationship Management Evaluation	2.5 days	291
Capacity Test	2 days	197
Functionality Test	5.5 days	442
Draft Final Report of the Qwest OSS Test	5 days	233
Follow-up Workshop	2 days	117

Figure 1-1 – Workshop Length and Pre-Filed Questions

14. A unique feature of the Arizona OSS Test was the establishment of a Document Viewing Room in which all Parties to the Tests could view the entire OSS Test record (or relevant portion thereof) prior to each Workshop. The Document Viewing Room, established in July 2001, ensured the broad scale distribution of underlying test data and records in the Arizona OSS Test and allowed parties an opportunity to review all underlying documentation prior to each workshop on each phase of the OSS test. Over 2,700 documents were made available for the parties' review during the course of the test.

15. The major CGE&Y Reports released during this test included: 1) Retail Parity Interim Report, 2) Relationship Management Interim Report, 3) Capacity Test Interim Report, 3) Functionality Test Interim Report, 4) Performance Measurement Audit Interim Report, 5) CGE&Y Final Report of Qwest's OSS, 6) Performance

Measurement Audit Final Report, 7) CGE&Y Evaluation of Qwest's Change Management Process, 8) CGE&Y Data Reconciliation Report, 9) CGE&Y Performance Indicator Definitions (PID) Data Element Summary Report 10) Functionality Test Results Comparison Report, 11) CGE&Y Supplemental DUF Evaluation. The major HP Reports released during the course of this test included: 1) The CLEC 12-Step Process Report, 2) the Help Desk Report, 3) EDI Connectivity Report, 4) IMA Connectivity Report, 5) EB-TA Report, 6) IMA-EDI 6.0 Migration Report, 7) Billing Supplement to 12 Step Process Report, 8) Functionality Test Summary Report, 9) Capacity Test Summary Report, 10) Billing Supplemental Test Summary, 11) SATE Evaluation Report, 12) SATE New Release Test Summary Report – 9.0, and 13) two Preorder to Order Integration Reports addressing both LSOG3 and LSOG5.

16. This Supplemental Report presents ACC Staff's report and recommendations regarding the recently completed OSS Tests conducted by CGE&Y. ACC Staff, with its consultant have observed all aspects of the OSS Tests from inception to conclusion, and have carefully reviewed CGE&Y's Final Report issued on March 29, 2002.

17. By design, the Staff Report is constructed to initially provide an overview of the OSS Test program, objectives and process. There follows a summary of the findings of the Test Administrator on all aspects of the test and a summary of Staff's conclusions and recommendations. Next, the objectives and process associated with each distinct OSS test is described. Following that discussion, is a discussion of the Test Administrator's findings and recommendations, the positions of the parties and a discussion by Staff along with Staff's findings and recommendations.

18. The Staff Report incorporates an extensive set of Exhibits that provides an additional level of detail in discussions of subject matter being addressed. The Exhibits represent a critical element of Staff's analysis and often provide the foundation for Staff's opinions and observations. This structure should enable the reader to delve into issues in much greater depth than presented in Report text, at their discretion. Exhibits cited in each section of this report are included at the end of the Report. Appendices are included after the Exhibits at the end of the Report. Graphs and Charts referred to in the text are included in pages following their citation in the text.

B. BACKGROUND

1. FCC REQUIREMENTS

19. The FCC has determined that access to OSS functions falls within an incumbent LEC's duty under Section 251(c)(3) to provide unbundled network elements under terms and conditions that are nondiscriminatory and just and reasonable, and its duty under Section 251(c)(4) to offer resale services without imposing any limitations or conditions that are discriminatory or unreasonable. See In the Matter of the Application by Bell Atlantic New York for Authorization Under Section 271 of the Communications Act to Provide In-Region, InterLATA Service in the State of New York, CC Docket No.

99-295, Memorandum Opinion and Order (Rel. December 22, 1999)("Bell Atlantic New York Order").

20. The FCC has also found that nondiscriminatory access to OSS is a prerequisite to the development of meaningful local competition. Bell Atlantic New York Order at para. 83. The FCC has determined that without nondiscriminatory access to the BOC's OSS, competitive local exchange carriers ("CLECs") will be severely disadvantaged, if not precluded, from fairly competing in the local exchange market. Id.

21. The FCC has indicated that for a BOC to obtain Section 271 relief, it must demonstrate that it provides CLECs non-discriminatory access to its OSS[2], and that its systems are operationally ready and capable of handling reasonably foreseeable demand, including CLEC generated loads. Specifically, Qwest must provide to the CLECs non-discriminatory access to its OSS for preordering, ordering, provisioning, repair and maintenance, and billing.

22. For OSS functions that are analogous to those that a BOC provides to itself, its customers or its affiliates, the nondiscrimination standard requires the BOC to offer requesting carriers access that is equivalent in terms of quality, accuracy, and timeliness. Id. at para. 85. The BOC must provide access that permits competing carriers to perform these functions in "substantially the same time and manner" as the BOC, or at parity.

23. For OSS functions that have no retail analogue, the BOC must offer access "sufficient to allow an efficient competitor a meaningful opportunity to compete." Id. at para. 86. In assessing whether the quality of access affords an efficient competitor a meaningful opportunity to compete, the FCC examines, in the first instance, whether specific performance standards exist for those functions. Id. If such performance standards exist, the FCC evaluates whether the BOC's performance is sufficient to allow an efficient competitor a meaningful opportunity to compete. Id.

24. The FCC analyzes whether the BOC has met the nondiscrimination standard for each OSS function using a two-step process. Id. at para. 87. First, the FCC determines whether the BOC has deployed the necessary systems and personnel to provide sufficient access to each of the necessary OSS functions and whether the BOC is adequately assisting competing carriers to understand how to implement and use all of the OSS functions available to them. Id. Under this inquiry, a BOC must demonstrate that it has developed sufficient electronic and manual interfaces to allow competing carriers equivalent access to all of the necessary OSS functions. Id. at para. 88. For example, a BOC must provide competing carriers with the specifications necessary for carriers to design or modify their systems in a manner that will enable them to

---

[2] The OSS are composed of various "back office" systems, databases and personnel that an incumbent LEC uses to commercially provision telecommunications service to its customers, resellers, and the purchasers of unbundled network elements. See Local Competition First Report and Order, 22 FCC paras. 516-28 (rel. August 8, 1996).

communicate with the BOC's systems and any relevant interfaces. Id. In addition, a BOC must disclose to competing carriers any internal business rules and other formatting information necessary to ensure that a carrier's requests and order are processed efficiently. Id. Finally, a BOC must demonstrate that its OSS is designed to accommodate both current demand and projected demand for competing carrier's access to OSS functions. Id.

25. Second, the FCC assesses whether the OSS functions that the BOC has deployed are operationally ready, as a practical matter. Id. Here, the FCC examines performance measurements and other evidence of commercial readiness to ascertain whether the BOC's OSS is handling current demand and will be able to handle reasonably foreseeable demand volumes. Id. at para. 89. The most probative evidence that OSS functions are operationally ready is actual commercial usage. Id. Absent data on commercial usage, the Commission will consider the results of an independent, third-party test of the BOC's OSS.

26. As part of its analysis, the FCC looks at the systems, databases, and personnel on which Qwest relies in support of its claim that it provides access to OSS on a nondiscriminatory basis. The FCC also examines Qwest's change management process and the technical assistance that Qwest offers to competing carriers seeking to use OSS. The FCC also examines Qwest's provision of access to the critical OSS functions of pre-ordering, ordering, provisioning, maintenance and repair, and billing.

2. THE ARIZONA OSS TEST

a. TEST OVERVIEW

27. Qwest's OSS Test Program for Arizona was designed with the following objectives in mind:

a. The execution of a comprehensive independent Third Party Test Plan that would demonstrate to the ACC, the DOJ and the FCC, the degree of Qwest's operational readiness, performance, and capacity to provide access to preordering, ordering, provisioning, repair and maintenance, and billing OSS functionality to CLECs in the State of Arizona. Results of the Test would reflect Qwest's performance in comparison to the standards established through the previously described workshop process.

b. To provide an open, collaborative process, that would enable Qwest's OSS program to be systematically honed and refined. To the extent practical, the tests were conducted in a "production environment," as an overlay to normal retail and CLEC activity.

c. Observed OSS deficiencies of the OSS Test program were corrected as a matter of course during the extended testing program. Likewise, as a matter

of course, opportunities for system enhancements were factored into the OSS Test program.

d. Tests that were determined to be premature (e.g., no CLEC had achieved the necessary functionality) were addressed on an exception basis, pursuant to the core OSS Test program if it was not practical to make meaningful evaluations within the OSS Test Plan time frame. [3]

28. As discussed, the test was conducted in accordance with the MTP which was developed collaboratively by the TAG. The MTP set forth the approach, scope and focus, timeline, roles and responsibilities, testing phases (planning, preparation, execution, and analysis/reporting), and all associated required activities for the testing of the CLEC's access to Qwest's OSS. This encompassed the aforementioned categories of tests and evaluations. The MTP provided a framework for the test participants to develop detailed test plans, as appropriate, and a "map" for the range of Arizona OSS tests that were to be conducted. The MTP listed Test Scenario-level detail and other high level requirements describing tests that were to be conducted in Arizona. The MTP described "what" was to be done.

29. The other controlling document was the TSD, which was developed by the TA with extensive TAG participation and was predicated on the MTP. The TSD provided detailed "Test Cases" within designated scenarios, together with scripts and other exact specifications as to how the Arizona tests were to be conducted. The TSD described in detail "how" the OSS tests and evaluations were to be executed. Scripted tests for Functionality, Retail Parity, and Capacity Tests were prepared by the TA and fully documented in the final version of the TSD.

30. There were five major components of the Arizona OSS test, which are summarized below:

a. Functionality Test – Designed to test the ability of Qwest's OSS to provide operational functionality to CLECs. The test encompassed Qwest's formal processes and procedures for preordering, ordering, provisioning, maintenance & repair (M&R), and billing services required by CLECs. The test encompassed resale, Unbundled Network Element-Platform (UNE-P), UNE-Loop, number portability, and UNE-Loop with number portability. Tests involved the collection of specified input data in a structured, controlled manner in accordance with specified test procedures. Performance Measurements provided the evaluative criteria for judging the success of the tests. The actual provisioning of service was evaluated for many orders. As stated earlier, the test was primarily conducted in a production environment, i.e., using the same systems that "real" CLECs used.

[3] For example, selected OSS tests for emerging services could be, if necessary, completed pursuant to the test program, as an extension of a Performance Assurance Plan or similar oversight mechanism. A process review was conducted in this case, in lieu of the test.

b. Retail Parity Evaluation – Designed to provide qualitative, as well as quantitative, information needed to evaluate the parity of Qwest's OSS with respect to wholesale versus retail operations. This test compared the ability of a CLEC representative using "Qwest-provided OSS interfaces" to achieve an overall "comparable level of service and experience" as compared to the level of service and experience that a Qwest representative could provide using Qwest's "standard internal OSS interface." This test incorporated a comparison of OSS responsiveness as well as a comparison of the quality of the data accessed by the CLEC and Qwest representatives. This was primarily a qualitative analysis test to see how the experience of a CLEC "Rep" compared with that of a Qwest Retail "Rep." [4] This test was unique to Arizona developed by the Commission's consultant, DCI; it has not been done before in any other Section 271 OSS Test.

c. Capacity Test – Designed to test the capability of Qwest's OSS to handle loads equal to or greater than those for forecasted volumes one year beyond the OSS Test date. The TA, based upon forecasted loads that were provided by both Qwest and the CLECs and were agreed upon by the TAG, established total capacity test volumes. The Capacity Test included a Scalability Analysis, a review of procedures associated with both "computer systems scalability" and "staff scalability," that sought to determine the degree to which Qwest systems, operations and processes would be capable of handling both "projected" and "unexpected" CLEC loads in the future. Also, a Stress Test was established with a nominal "stress load" of the 12-month demand forecast plus an additional 50 percent. The Stress Test had no pass or fail criteria. It was performed to determine what volume level resulted in degradation of Qwest's OSS performance.

d. Relationship Management Evaluation – Evaluated whether the methods, procedures and information that Qwest employed to communicate with the CLECs were efficient and effective. The evaluation examined processes and procedures used by Qwest for CLEC account establishment, account management, training, CLEC/Qwest interface development, and Qwest "change management." An evaluation of Qwest's Stand Alone Test Environment (SATE) was conducted independently by HP, and is discussed in a separate supplemental report. Closely related thereto, is CGE&Y's evaluation of Qwest's Change Management Process which is also included in the supplemental report which addresses SATE.

e. Performance Measurement Evaluation – Designed to provide an assessment of performance measures that have been established to evaluate Qwest's performance in providing service to the CLECs. A Performance Measurement Audit (PMA) was conducted to determine if reported Qwest results and data were consistent with the definitions of performance measures as

[4] CGE&Y's quantitative analysis went well beyond MTP requirements. However, the Retail Parity Evaluation benefited from heightened understanding of time delays associated with specific IMA processes.

described in Qwest's Service Performance Indicator Definitions (PID.)[5] The audit was intended to verify that all calculations were being performed correctly, subject to input data being accurate. The validity of the input (or raw) data was evaluated by data reconciliation studies conducted by the TA, which contrasted Qwest and Pseudo-CLEC data and correlated information provided by the participating CLECs with Qwest's reporting of performance results under the measures defined in the PIDs. Liberty Consulting also conducted data reconciliation to determine if information provided by the participating CLECs demonstrated that Qwest's reported performance results were accurate, in accordance with measures defined in the PID.[6] This was an independent audit of Qwest's Arizona data used in calculating PIDs, in the context of a Qwest 14-State service area review.

31. Through these five tests, CGE&Y was able to undertake a thorough and comprehensive test of Qwest's wholesale processes and procedures and also do an exhaustive examination of their performance as measured by a set of Performance Measurement indicators devised by the Arizona TAG. CGE&Y and HP's test was very broad, examining all stages of the relationship between Qwest and competing carriers, including the initial relationship, performing daily operations, and maintaining the relationship. Every aspect of the Qwest/CLEC relationship was explored and evaluated, including interface establishment.

32. By design of the test, the Pseudo-CLEC's systems interfaced with Qwest's production OSS used to support CLECs on a day-day basis. Thus, the OSS tests were performed by the CLEC and Pseudo-CLEC in a live environment, but in such a fashion so as not to disrupt existing customer services. This was as an overlay to normal retail and CLEC activity. The Test Administrator and Pseudo-CLEC maintained the greatest degree of "blindness" practical. Thus, Qwest personnel dealing with the Pseudo-CLEC believed it was a real CLEC. These processes allowed the Pseudo-CLEC and the Test Administrator to observe the same performance characteristics that CLECs see in the conduct of their business. Parties were thus able to observe and obtain through the activities of HP, a first-hand understanding of "living the CLEC experience" as a start up CLEC with Qwest. The Pseudo-CLEC also developed the interfaces for testing Qwest OSS systems.

33. Electronic gateways supported by Qwest serve as the means by which CLECs accessed Qwest's OSS systems. The specific electronic gateways considered within the scope of this testing were Interconnect Mediated Access (IMA) and Electronic Data Interchange (EDI) interface for pre-order and order; Electronic Bonding - Trouble Administration (EB-TA) and Customer Electronic Maintenance &

---

[5] Enumerated in Appendix A of the PMA. All measures, and virtually every sub-measure and level of disaggregation were ultimately audited.

[6] Liberty Consulting performed data reconciliation studies in Arizona and other Qwest states. Arizona imported results from other states in order to confirm Arizona results. Liberty Consulting focusing on UNE-Loops and LIS Trunk provisioning.

Repair (CEMR) (supplanting EB-TA) for maintenance and repair and; Exchange Message Interface (EMI) and EDI for billing. The individual product types processed by means of the referenced electronic gateways are listed in Exhibit 2-1.

34. Both the application to application electronic data interchange ("EDI") and the terminal type web-based graphical user interface ("GUI") were tested. HP, as the Pseudo-CLEC, developed an electronic interface to Qwest's EDI for use during testing. The Pseudo-CLEC used IMA EDI and IMA GUI interfaces to submit pre-order transactions, local service requests (LSRs) and trouble transactions for most tests. The Pseudo-CLEC also developed a "transaction generator" to execute Test Cases for both the Functionality and Capacity Tests. The Capacity Test was conducted using data generated by the Pseudo-CLEC, and CLEC "transaction simulators."

35. HP, as the Pseudo-CLEC, worked with Qwest business rules, created and tracked orders, logged trouble tickets, etc. HP also established electronic bonding with Qwest, translating back and forth between business and EDI rule formats and assisting CGE&Y in resolving problems such as missing orders and responses. Documentation was evaluated for usefulness, correctness and completeness.

36. For test scenarios where the Pseudo-CLEC interfaces could not practically provide the coverage required, coverage by voluntary CLECs was utilized to supplement the tests being performed by the Pseudo-CLEC. These scenarios included EB-TA scenarios,[7] and other arrangements where the Pseudo-CLEC interfaces to Qwest OSS did not exist. MCI WorldCom (WorldCom) agreed to enter repair orders through its EB-TA interface on the Pseudo-CLEC's behalf.

37. Three CLECs participated in the test to provide the supporting activities and or facilities required during the test that could not be provided by the Pseudo-CLEC arrangement. AT&T provided assistance with UNE-L and LNP provisioning and testing. WorldCom supported the submission and data collection of trouble tickets via Electronic Bonding – Trouble Administration ("EB-TA') on Pseudo-CLEC accounts. COVAD entered CGE&Y test orders for line sharing, and provisioned and tested Digital Subscriber Line ("DSL") on the installed lines.

38. Testing encompassed various order types associated with three primary modes of CLEC entry: resale, unbundled network elements, and number portability. CGE&Y and HP performed pre-ordering, ordering, provisioning, maintenance and repair, and billing transactions to evaluate the functional capabilities of Qwest's OSS and whether competing carriers receive a level of service comparable to Qwest's retail service. Testing was performed for specific product types including resale (with parity tests against the retail equivalents), UNE-P, number portability, and UNE-L (with and without number portability). Testing included both residence and business orders for the

[7] Electronic Bonding – Trouble Administration, a Qwest interface used for submitting maintenance and repair requests.

following situations: "new," "conversion as is", "conversion as specified," "partial migrations," "change," "supplementals," "disconnect," "cancel," "suspend," and "restore" – each relevant to specific product scenarios that were being tested. Consistent with Qwest's documented business rules and specifications, the OSS were expected to generate acknowledgments, error rejections, Firm Order Confirmations (FOCs), Service Order Completions (SOCs) and jeopardy notifications to the CLECs.

39. A unique feature of the Arizona test was its utilization of Friendlies, or actual volunteers to function as end-users. The Friendlies were recruited and managed by CGE&Y to participate in Functionality Testing. Friendlies provided the physical locations to install test lines and performed specific test calls as directed by CGE&Y. Friendlies further enhanced test efforts by providing "real-life" customer input.[8] Friendlies received packets of information from the Test Administrator detailing the types of transactions the Friendly would be required to originate, the dates required, and any documentation they are required to create to document their test calls. The Friendlies consisted mainly of employees and former employees of the companies that participated in the TAG.

40. The Arizona TAG developed the first comprehensive set of performance measurement indicators in the Qwest region. The performance measurement indicators were used to gauge Qwest's performance in the Third Party OSS Test and when looking at their available commercial data. The PID Version 6.3 consists of 46 measures, with a total of over 700 sub-measures on a disaggregated basis. The specific measures to be evaluated by CGE&Y during the course of the test are contained in Appendix C of the MTP. CGE&Y analyzed more than 200 performance measure disaggregations during the test.

41. Performance Measures fall into three broad categories: parity, benchmark, and report only. [9]

a. Parity measures compare performance that Qwest provides its competitors to that which Qwest provides to itself, its retail customers, or its affiliates. Parity measures require that the wholesale service being evaluated have an analogous retail service as the measurement standard.

b. Benchmarks define a "level of performance" for services provided to CLECs for which there is no equivalent retail service being offered by Qwest. Benchmarks are negotiated between the parties and established at a level that would enable an "efficient competitor" a meaningful opportunity to compete

---

[8] Friendlies were used in Resale, Unbundled Network Element – Platform (UNE-P), Unbundled Network Element – Loo p (UNE-L), UNE-L with Local Number Portability (LNP), and LNP tests.

[9] Specific performance data for the use in calculating the performance measures as defined by the PID and specified in Appendix C of the MTP. The calculations were defined in the "Statistical Approach" portion, in Section 9 of the TSD.

with Qwest in the provisioning of telecommunications service. The benchmark becomes the standard for evaluating performance.

c. The "report-only" category is used for diagnostic purposes -- generally as backup or support for other performance measures. These include measures for which there are insufficient quantitative information, or for which a benchmark has not been established.

42. Performance measurement results derived from data gathered and analyzed during the Functionality Test were intended to assess Qwest's performance in providing parity service to the CLECs. These were in accordance with established Performance Indicator Definitions (PIDs) which are the means of reporting performance results to CLECs on a monthly basis. Arizona Service Performance Indicator Definition (PID) 6.3 defined the standards that Qwest was to meet in the FT for compliance with Section 271. [10]

43. A statistical performance measure analysis was designed; test orders were executed by the Pseudo-CLEC; Qwest provided ad hoc data for the FT phase; and FT output were provided to the TA by the Pseudo-CLEC.

44. Following the OSS Test, test results were utilized in data reconciliation and validation that contrasted Qwest and Pseudo-CLEC data. In addition, another third party test in other states by Liberty Consulting correlated information provided by the participating CLECs with Qwest's reporting of performance results under the measures defined in the Performance Indicator Definitions (PIDs).

b. SIGNIFICANT TEST PROCESSES

45. Guidelines and assumptions established by the ACC and the Test Administrator underlying the OSS Test program were as follows:

a. CGE&Y, as the Third Party TA, provided day-to-day supervision of the test program, validated test results, and was responsible for evaluating test results, a final evaluation as input to the ACC, and preparation of interim and final reports.

b. The TA maintained a Master Issues Log of all OSS testing issues that were submitted or presented for resolution by any TAG member or participant. Each issue was assigned a unique identification code. The Master Issues Log recorded the matter or category to which the issue was related; any applicable measurement identification code; status of the issue; an issue description; the issue originator; date the issue was opened; due date for action; "action owner;" and date the issue was closed.

[10] Prior to this phase of the FT, Qwest's performance measurement reporting process had been extensively and thoroughly audited. This encompassed Qwest's methods and procedures for gathering, calculating, reporting and applying PID-related data. The results of this audit are discussed in the Performance Measures Audit section of this report.

c. The TA was charged with maintaining the highest degree of 'blindness' as was practical, to maintain impartiality and objectivity. Neither CGE&Y nor HP had a reporting relationship to Qwest. Pursuant to their contracts, both CGE&Y and HP reported directly to the ACC.

46. The TAG process was a critical component of the OSS test. The TAG process provided the structure necessary for the highest degree of openness and collaboration. The major aspects of the TAG process are described below:

a. Staff, with input from the TAG, defined TAG operating procedures, including scope of involvement, how to place items on TAG meeting agendas, dispute resolution, distribution of information, frequency of meetings and other matters.

b. The TAG strived to resolve issues by consensus. When it was determined that consensus could not be reached on a particular issue, it was declared an impasse issue. Staff was charged with resolving all of the TAG's impasse issues.

c. The TAG process allowed the TA and Pseudo-CLEC to advise the TAG members of any issues they encountered through the course of the test. It also allowed the CLECs and Qwest to pose test related questions to each other, Staff, the TA, or the Pseudo-CLEC.

d. The TA was responsible for administrating the TAG process. This included tracking issues to ensure nothing fell through the cracks, taking minutes at the TAG meetings, maintaining TAG contact lists, etc.

47. Appendix F of the MTP contained the "Openness" guidelines which were put into place by the ACC Staff to ensure that the testing process would remain completely open and all parties would be given every opportunity to participate in the test, review and analyze results in an open fashion and raise issues during each phase of the test. Any decisions made regarding the test were as rule done through a collaborative process with TAG input. As part of this process, both CGE&Y and HP were required to record all of their contacts with Qwest and the topic of discussion in what became known as the "Incidental Contacts Reports" which were published on a monthly basis by both CGE&Y and HP. All meetings, including executive sessions, between CGE&Y and HP and Qwest, were noticed to all TAG members.

48. Each party had their own defined role in the testing effort. Qwest's supported the testing effort in the following ways:

a. Assumed responsibility for the installation and cost of the required connectivity facilities (including T1s) up to the interconnection demarcation point with the Pseudo-CLEC.

b. Provided subject matter experts (SMEs) to assist in test definition, root-cause analysis, and other tasks necessitating in-depth knowledge of and experience with Qwest's OSS, as well as associated operations methods and procedures.

c. Established lines for Friendly end-user accounts (e.g., involved with "retail to CLEC conversion") prior to the start of the test and the initiation of transactions.

d. Established pseudo-accounts necessary for the Capacity and Functionality Tests.

49. The role of the CLECs was defined in the MTP as follows:

a. Provide input to the final MTP through the TAG
b. Provide input to the test specifications
c. Provide input to the Test execution plans
d. Provide for Test execution
e. Provide Test support and SMEs as necessary to the Test Administrator

50. A "military style" testing process with a "test until you pass" [11] philosophy was adopted, incorporating a "pass/fail mechanism" that was intended to impose a clear-cut assessment of achievement and results. In this context, a series of Incident Work Orders (IWOs) were created by the TA to resolve "test exceptions" when an interface, system or process evaluated by the TA was either "suspect" or did not meet objective criteria, standards or expectations established in the MTP or TSD. The process of IWO creation was triggered either during the course of the testing process as problems were encountered, or "off-line" as problems were discovered during the course of cross checks and qualitative reviews. IWOs were distributed to all TAG members for review and comment.

51. CGE&Y assigned one of three "severity levels" to each IWO based on the experience at the time the incident occurred. Level One IWOs documented the least severe deficiencies and were akin to an "observation." Level Two IWOs identified more severe problems. Level Three IWOs addressed problems that were so severe that the OSS test would not continue until they were resolved. Retesting was potentially required to close any IWO. CGE&Y assigned a tracking number and severity level to each IWO and forwarded the IWO to Qwest for issue resolution. Qwest was required to respond to all IWOs within two working days. Qwest's response included their understanding of the incident and their proposed fix. The TA evaluated Qwest's responses thoroughly and determined whether the IWO could be closed based solely on Qwest's response, whether retesting was required to verify that Qwest's proposed fix was adequate, or whether further discussion was necessary.

---

[11] Unless a TAG-level decision had been made not to test further.

52. All parties were allowed an opportunity to comment on Qwest's response and CGE&Y's evaluation. On some IWOs there was quite a bit of "back and forth communication" between the TA, Qwest and the CLECs. This entire process was open to the CLECs who were free to (and frequently did) comment on and ask questions about each IWO. Once CGE&Y verified that the issue identified in the IWO was satisfactorily addressed by Qwest, a Performance Acceptance Certificate (PAC) was distributed to the parties and the IWO was closed. Disagreements were aired at TAG meetings and if not resolved generally went to impasse for ACC Staff resolution. Approximately 230 IWOs were issued during the OSS Test, not including IWOs generating from the PMA. This process is highlighted in Exhibit 2-2.

53. The comprehensive set of 360 IWOs (including PMA IWOs) created during the course of the test addressed the range of issues raised in the testing process. Of the 232 IWOs formulated, 182 IWOs were resolved and ultimately closed out. An additional 128 IWOs were created in conjunction with the Performance Measurements Audit. The remaining 48 IWOs were withdrawn or the Test Administrator ascertained that no action was required; and two are currently under evaluation. Closure of all IWOs was a prerequisite for completion of the OSS Test program.

54. A summary of the IWOs by Test and by category is shown in the following Figure:

Test	OSS Improvements Initiated	System Tables	Training Updates	Procedure	Metrics	Documentation	TOTAL
Functionality	44	7	22	27	28	9	137
Retail Parity	0	0	3	3	0	7	13
Capacity	3	0	0	0	0	0	3
Relationship Management	1	0	7	7	0	14	29
TOTAL	48	7	32	37	28	30	182

Figure 1-2 – Number of Incident Work Orders By Test and Category

55. The IWO process also allowed all of Qwest systems or process deficiencies their root cause, and their fixes, to be thoroughly recorded and documented. A breakdown of the OSS deficiencies that were resolved or OSS system and process improvements implemented during the course of the OSS Test program is as follows:

> OSS Improvements Implemented – A total of 48 IWOs involving software OSS upgrades were implemented, verified and closed. In due course, problem discovery, diagnosis, and resolution were systematically pursued until end-to-end system performance could be verified. Staff believes that Qwest's OSS are substantially improved as a result of this process.

OSS Databases Modified – A total of seven IWOs involving changes to various system tables -- repositories of data accessed by OSS software -- were implemented.[12]

OSS Training Instituted – A total of 32 IWOs were resolved through training of Qwest and/or CLEC staff. These events were triggered by "human error," in which case OSS-related problems were traced to misinterpretation of instructions or inputting incorrect data by Operations personnel.

OSS Procedures Modified – A total of 37 IWOs were addressed by instituting changes to Operations procedures. These encompass process improvements, enhanced tracking and data reconciliation, adjusted time intervals, creation of SATE, increased access via Qwest's websites, etc.

OSS Performance Measures Realigned – A total of 28 IWOs were resolved through rationalization of metrics, all associated with Functionality Tests. This encompassed realignment of measurements, correcting calculations, establishing suitable benchmarks, changing PIDs, increasing reliance on commercial data, and standardizing notifications and response times.

OSS Documentation Modified – A total of 30 IWOs were closed through improvements to Qwest's documentation. Changes to documentation included upgrades to System Administration, User and Implementation Guides, incorporation of information from the Manual Interfaces on websites; improvements to reports and elimination of inconsistencies in published processes; introduction of user-friendly formats and enhancements to Product Catalogs.

Accompanying Systems Upgrades - In conjunction with IWO-driven changes, improvements were made to Performance Measurements, change management, and stand alone testing to affect comprehensive OSS enhancements.

c. OVERVIEW OF QWEST SYSTEM ARCHITECTURE

56. Qwest systems and databases used by CLECs are described in Appendix A. Qwest OSS and associated architectures and interfaces that directly effect the CLECs are summarized in the following table:

➢ Interconnect Mediated Access (IMA) gateway is an "architecture" that enables CLECs to access Qwest's back-end systems while preserving the integrity and security of these systems.

[12] Qwest "back office" systems do not necessarily share databases, a problem common to telecom, and other large corporations and government agencies. Several database consolidations and other improvements were implemented.

- IMA – EDI Electronic Data Interface (EDI) is an international standard for the interchange of business data. It enables CLECs to design their own "front-end systems" to capture preordering, ordering and provisioning information and provide translations to accommodate data elements and transactions defined by Qwest.

- IMA- Graphical User Interface (GUI) is a proprietary Qwest system designed by Qwest for the express purpose of providing CLECs an additional means of accessing Qwest's systems. The IMA-GUI allows CLECs to access Qwest's OSS through a normal internet connection without the need for them to develop their own front end systems.

- Electronic Bonding-Trouble Administration (EB-TA) is a gateway interface with associated programming and business rules that provides CLECs the means to design their own Graphical User Interfaces (GUIs) for conducting maintenance and repair activities with Qwest.

- Customer Electronic Maintenance & Repair (CEMR) is an architecture for submitting maintenance and repair orders. CEMR is a proprietary web-based GUI application designed by Qwest. [13]

- Customer Records Information System (CRIS) and Integrated Access Billing System (IABS) are Qwest billing architectures.

Figure 2-1 - Primary OSS and Interfaces Impacting CLEC Interactions With Qwest

57. A schematic diagram is provided in Figure 2-2, on the following page, that depicts the IMA provided by Qwest. Under this arrangement:

a. CLEC OSS or workstations access Qwest gateways through a security firewall.

b. CLECs communicate with a Qwest "human-to-computer" interface and/or a "computer-to-computer" interface for transmitting and receiving information.

58. Once a transaction is received by the Qwest gateway, a set of business rules is applied to determine how to process the request. To obtain information from Qwest's OSS or pass information through them, the OSS "Access Layer" communicated with the downstream OSS to send or retrieve data.

59. Regardless of whether a transaction is received by the Qwest gateway by way of the IMA-GUI or a CLEC-designed EDI, it is processed by means of the same set of business rules and travels through the same OSS Access Layer to reach the downstream OSS.

a. If the transaction involves the submission of a LSR, the LSR is placed in the Common IMA database regardless of whether it was transmitted though the IMA gateway or the EDI interface. This database

[13] EB-TA for Maintenance & Repair was supplanted by CEMR, which was included in the Functionality Test.

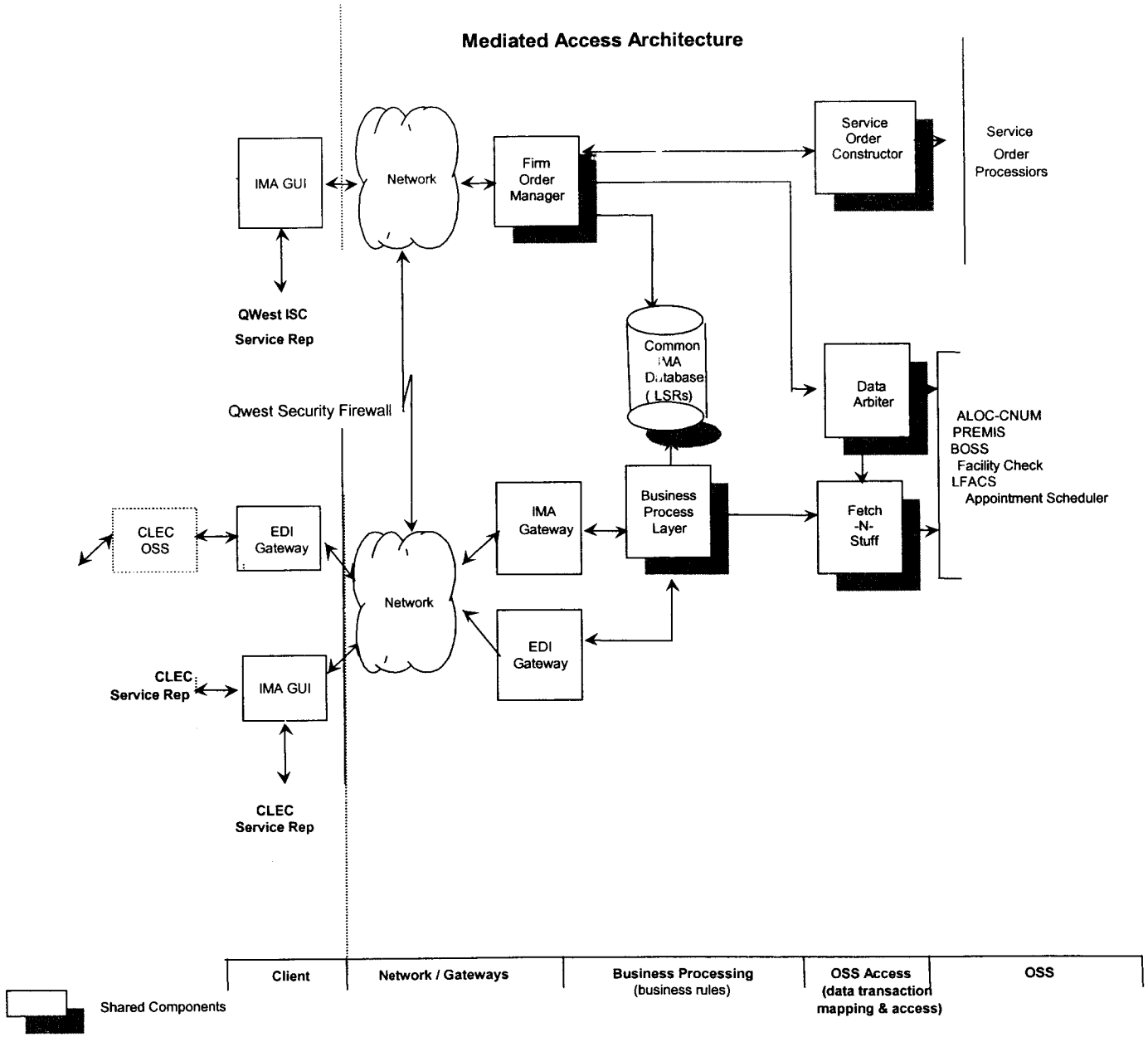

Figure 2-2 - Pre-Ordering and Ordering Architectures

is updated with the status of the LSR as the Interconnect Service Center processes it.

b. If a transaction involves a submission of a trouble report or any other trouble report request, the transaction is processed through the OSS Access Layer and routed to the appropriate repair OSS.

c. When an end-user customer's account involves resale by a CLEC, the resulting service order is updated, and the account adjusted to reflect that change.

60. Billing interfaces and components that produce usage and monthly bill information are described in Figure 2-3, on the following page. Qwest's Billing Systems include:

Billing Architectures - As a CLEC's end-user customers make calls, information is transmitted from Qwest's automated message accounting system to the appropriate billing system, where it can be associated with the CLEC's wholesale account. These usage data are in turn forwarded to the CLEC in a "daily usage file" (DUF) on a daily basis. This is further classified in Access DUF (ADUF) and Originating DUF (ODUF) categories.

- The CLEC uses the DUF file to create bills for its end-user customers reflecting the use of the network. UNE-P CLECs also bill interexchange carriers ("IXCs") for access and egress services by means of the ADUF records.

- In parallel, Qwest produces a "Billing Summary File" encompassing all recurring and non-recurring charges incurred by the CLECs as its wholesale customer. A bill is provided to the CLEC on a monthly basis, via an account management module, that captures usage and service order details associated with the specific CLEC's accounts.

IABS Architecture – IABS involves processing of trunk-side UNEs and interconnection services. An entry point is provided via an ASR submitted by the customer service representative. ASRs are directed to a service order-processing module. Both usage and service orders are subsequently sent to the account management module.

Account Management Module Outputs - An EDI "resale file" is subsequently fed to an account management module. After usage and service order details are associated with accounts, the accounts are rated, and bills and customer service records (CSRs) are produced. Outputs for reciprocal compensation, interexchange meet-point billing, resale and UNEs are then provided to the CLECs.

Billing Architecture

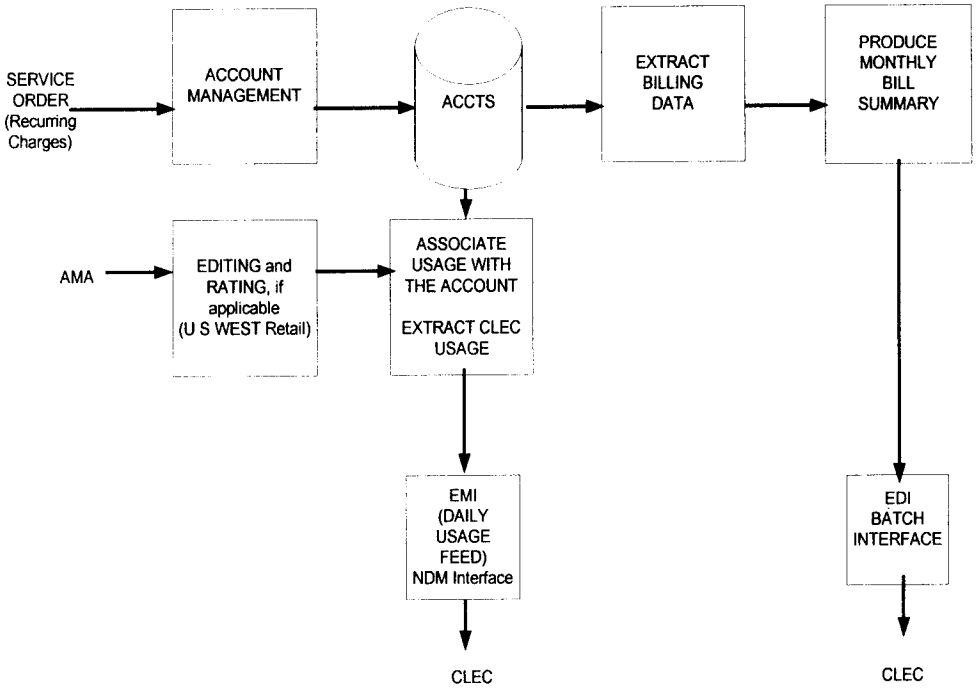

IABS Billing Architecture

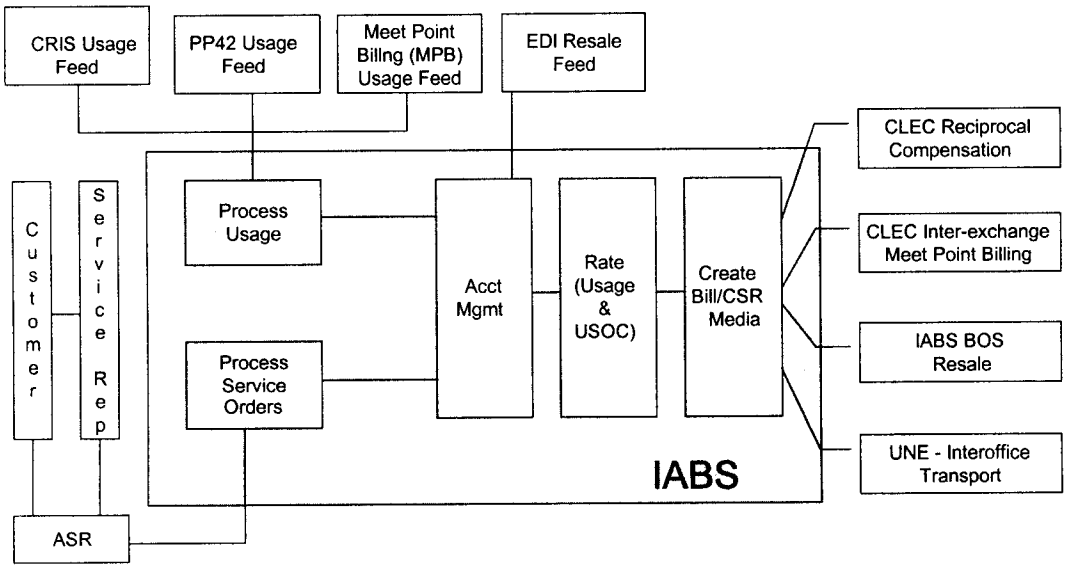

Figure 2-3 – Billing Architectures

d. OTHER RELATED QWEST PROCESSES EVALUATED

61. Other processes evaluated that were integral with the OSS Test, that are addressed in a separate supplemental report include:

Change Management Process (CMP) is Qwest's version of an industry process for receiving, tracking, prioritizing, and scheduling CLEC-requested changes to the various preordering, ordering, and maintenance and repair (M&R) interfaces available to them. The CMP planning process provides a forum for CLECs and Qwest to evaluate, prioritize and coordinate ongoing change requests, release notifications, systems release life cycles, and inter-company communiqués. During the OSS Testing, a CMP process redesign was undertaken by Qwest to provide more responsiveness to CLEC concerns. The Test Administrator also evaluated this redesigned process.

Stand Alone Test Environment (SATE) is essentially a simulated OSS that CLECs can use to practice submitting orders and pre-order queries. This process, known as interoperability testing, allows CLECs to use independent production account data to facilitate the development of OSS and Electronic Data Interchange systems that are required for implementing new Qwest software releases, and testing the compatibility of CLEC's own new software releases with Qwest's interfaces. At the outset of the OSS test no test environment was available for the CLECs; Qwest required interoperability testing to be done in a *production environment* (i.e., with *real* customer orders.) No other Regional Bell Operating Company (RBOC) had obtained Section 271 approval without the availability of a test environment in which CLECs could practice submitting orders in a nonproduction environment since performing interoperability tests in a production environment is a significant burden on the CLECs. Staff informed Qwest that in its opinion a test environment would need to be developed by Qwest and formally evaluated before Staff could consider their OSS to be satisfactory for Section 271 purposes. Hewlett-Packard (HP) was charged with evaluating the SATE that was eventually developed by Qwest.

e. SUMMARY OF OSS TEST FINDINGS AND CONCLUSIONS

62. CGE&Y's Final Report on Qwest's OSS is over 600 pages long and contains hundreds of pages of appendices. In the Executive Summary of its OSS Test Final Report, CGE&Y provided highlights of results and findings of each test, and conclusions drawn. CGE&Y's findings are summarized briefly below.

a. Functionality Test

63. CGE&Y concluded that Qwest provides sufficient electronic functions and manual interfaces to allow competing carriers access to all of the necessary OSS functions in Arizona. This conclusion is supported by test activity; observations; performance results; and system, procedural and metric improvements that Qwest has

made in response to IWOs generated during the Functionality Test. Qwest made hundreds of system, process, and documentation improvements as a direct result of the OSS, PMA and Data Reconciliation test efforts.

b. Retail Parity Test

64. In analyzing the results of Phase 1 and 2 of the RPE as well as the results of the reevaluation, CGE&Y concluded that the experience of a CLEC service representative using the various available OSS interfaces is substantially the same as that of a Qwest service representative performing similar activities using internal OSS interfaces. CGE&Y also concluded that Qwest provides CLECs with substantially the same access to its OSS for the purposes of initiating service requests and M&R trouble transactions. CGE&Y further concluded that the OSS access that Qwest provides to CLECs for the purposes of initiating service requests and M&R trouble transactions does not negatively impact the customer experience as any time differences observed between retail and wholesale would be transparent to a customer while communicating with the representative. These conclusions were based on a combination of qualitative, quantitative, and timeliness results, as well as observations and statistical analysis to determine the overall experience of a CLEC service representative as compared to a Qwest service representative performing similar activities.

c. Capacity Test

65. CGE&Y concluded that Qwest's OSS are capable of processing forecasted volumes up to 12 months in the future while maintaining a level of performance well within the established benchmarks. CGE&Y also concluded that for System Scalability, Qwest has well documented processes and procedures in place to maintain system capacity sufficient to meet projected future loads. Finally, CGE&Y concluded that for Staff Scalability, Qwest maintains adequate forecasting procedures to identify the need for additional work force within a sufficient time frame that allows for appropriate training and placement.

d. Relationship Management Test

66. CGE&Y's findings relative to Qwest's relationship and interactions with CLECs are as follows:

a. Qwest's CLEC account establishment processes are sufficient. During the course of the evaluation, Qwest has continued its efforts to improve its processes and the quality of information available to the CLEC community related to account establishment.

b. Qwest's current account management processes are sufficient, although the original processes appeared to require reinforcement and/or improvement based on the many negative comments received from CLECs on this subject.

Throughout the course of the evaluation, CGE&Y was able to track improvements to many of these processes.

c. Qwest's interface development process is sufficient. Feedback from CLECs was positive regarding the knowledge of the staff and the project management processes Qwest uses to manage individual CLEC development efforts.

d. The online documentation available to CLECs is sufficient and has been vastly improved over the course of the Arizona Section 271 Test. CGE&Y finds that sufficient content exists, in a well organized manner, for a CLEC to find all information required to conduct business activities with Qwest. This information is being continuously refined, and in the future much of it will fall under the aegis of Qwest's CMP.

e. A complete redesign of CICMP to a new Qwest CMP is in progress. The new CMP is a collaborative process that is addressing many of the previously identified deficiencies. Qwest's revised CMP is the subject of a separate report.

e. Performance Measurement Evaluation

67. CGE&Y's audit of Qwest's performance measure systems and processes confirmed that these systems and processes were substantially in compliance with the requirements of the Arizona PID for the months included within the audit for each particular measure. Generally, Qwest systems and processes provided for the reporting of performance measurement results as required by the PID. Except as noted below, the OSS performance measurement systems and processes were observed to be available and maintained so as to provide for complete, accurate and timely reporting of the results. The systems and processes were generally protected by adequate security controls, both physical and logical, and are maintained to assure their reliability and functionality.

68. CGE&Y's Final Data Reconciliation Report and PID Data Element Summary Report provide added assurances that Qwest is reporting in compliance with the requirements of the Arizona PID.

69. Liberty concluded on the basis of the work done in Arizona that the information provided by CLECs did not demonstrate material inaccuracies in how Qwest reported its performance.

f. SUMMARY OF STAFF'S OVERALL CONCLUSIONS AND RECOMMENDATIONS

70. Staff has reviewed CGE&Y's work and the results thereof thoroughly, and considered CLEC and Qwest inputs offered in briefs and in test report workshops. Staff

agrees with the findings of its Test Administrator in virtually all cases for the reasons discussed below. This is not to say that there were not many legitimate concerns raised during the test which needed to be addressed. However, due in part to the extensive nature and duration of the Qwest Arizona OSS test, and the interim workshop process, Staff and CGE&Y were able to address and resolve many of the parties' concerns early on in the process, through retesting or other means.

71. Qwest made many improvements based on deficiencies that CGE&Y identified during testing, which were documented in IWOs. Qwest has corrected dozens of system problems and processing errors, and various process improvements have also been implemented. Qwest's overall documentation has improved dramatically, and their wholesale website (where CLECs get information) has been completely reengineered. The training program has been redesigned. A complete redesign of Qwest's CMP is in progress. Furthermore, as a result of the PMA, many PID improvements have been implemented.

72. Nonetheless, Staff has the following recommendations that Qwest should be required implement. These recommendations, however, are not required to be implemented prior to receiving 271 approval, but should be agreed to by Qwest as a condition for granting 271 approval.

a. Qwest should assess system improvements for reducing the IMA-GUI input steps required by CLECs. This effort should be conducted in conjunction with other system changes.

b. Qwest should develop the means that would provide CLECs the ability to request ad-hoc data for performance measurement calculations for PIDs contained in the PAP. This would provide the most effective method for ILECs to review the performance results provided by Qwest.

c. Qwest should test its Daily Usage File (DUF) provisioning to CLECs to ensure accurate and timely delivery of these records. This test should be conducted within 12 months and be conducted with Staff oversight.

d. The ACC initiate a proceeding to develop and implement Wholesale Service Quality Standards.

e. The ACC should accept the recommendations of both CGE&Y and HP as discussed herein.

73. As discussed in the body of this Report, Staff is of the opinion that OSS Test requirements and objectives have been realized, and the comprehensive independent Third Party Test has been successfully executed within the parameters set forth in the MTP and TSD; and that Qwest meets FCC requirements in this regard.

74. In conjunction with IWO-driven changes, improvements were made to Performance Measurements/PIDs, change management, and stand alone testing to affect comprehensive OSS enhancements in the interests of the CLECs. In Staff's opinion, resolution of these problems and incorporation of wide-ranging improvements during the course of the three-year program, has transformed Qwest's processes from many that were problematic and inadequate for Section 271 compliance, into a consistent set of processes which now fulfills the criteria for Section 271 relief. In addition to enhancements that have been demonstrated through quantitative measures, significant qualitative changes have been realized as well. Staff perceived Qwest's relationship with the CLECs at the outset of the OSS test as unresponsive, with decisions being made unilaterally by Qwest, and CLEC interests marginalized.

75. Staff is of the opinion that Qwest now provides the CLECs non-discriminatory access on a par with its own retail operations so that a knowledgeable competitor has a meaningful opportunity to compete. In this regard it should be noted that the rigorous military-style testing program, and successive rounds of re-testing that it entailed, have systematically addressed the concerns raised by the parties and enabled all material issues and concerns to be effectively resolved. It should be further noted that the OSS Test program was extended time and again until all significant issues were "closed out" to the satisfaction of the TAG.

76. Staff deems the OSS Test portion of Qwest's Section 271 initiative to be complete. Staff believes the record compiled during the course of the OSS Test program will demonstrate to the ACC, the DOJ and the FCC, an appropriate degree of Qwest's operational readiness, performance, and capacity to provide access to preordering, ordering, provisioning, repair and maintenance, and billing OSS functionality to CLECs in the State of Arizona. Staff anticipates that process improvements will continue, and that follow-up requirements on selected issues (e.g., emerging services) can be suitably monitored and addressed through supplemental filings and prescribed escalation procedures.

77. Performance data, provided as part of the OSS Test database, has been audited by the Test Administrator and reinforces Staff's opinion as to Qwest's compliance. This type of data reflects Qwest's actual performance in providing service to CLECs. Based on the "Results" data for the last twelve months through February 2002, Staff concludes that Qwest is providing excellent service to CLECs and is 271 compliant in this area. Staff acknowledges the significant improvement that Qwest has made in service delivery to CLECs.

C. DISCUSSION OF INDIVIDUAL OSS TEST FINDINGS AND RESULTS AND POSITIONS OF THE PARTIES AND RECOMMENDATIONS OF THE STAFF

1. FUNCTIONALITY TEST

a. Test Objectives and Process

78. The purpose of the Functionality Test (FT)[14] was to determine the extent to which Qwest's OSS provided operational functionality to the CLECs.[15] The primary objective of the FT was to verify the ability of the Pseudo-CLEC to submit LSRs to the Qwest OSS and have Qwest, in turn, successfully install the requested service or facilities in a timely fashion. End-to-end integration of pre-order and order data was evaluated.[16] This entailed tracking the progress of the LSRs through those systems; installing the service or facility; observing final order completion; verifying the establishment of billing records; and verifying the accuracy of those records against known usage. In some cases, it was necessary for participating CLECs to execute ASR test scenarios. A second principal objective of the FT was to certify the ability of a CLEC to access M&R systems using EB-TA and CEMR. In parallel, the Pseudo-CLEC accessed M&R systems using Qwest's IMA GUI.

79. In short, the test determined whether Qwest's OSS adequately performed preordering, ordering, provisioning, maintenance and repair, and billing functions using a set of predefined test scenarios. Details are provided in Exhibit 3-1. Tests utilized Qwest's production OSS and processes, including manual operations.

a. Preordering is the process by which CLECs query Qwest databases to verify or obtain the information necessary to prepare and issue a valid LSR or ASR and to retrieve information about the resources of Qwest.

---

[14] The FT required extensive planning and coordination between CGE&Y and the other test participants. The Pseudo-CLEC and participating CLECs generated input LSR and ASR data (e.g., resale, UNE-P, UDIT, and UNE-L test cases, and Retail to Resale Conversion test cases). Friendly end-user accounts were established in conjunction with the CLEC test accounts. CLECs provided input to the test scenarios, test specifications and cases. Descriptions of the roles and responsibilities for the FT are provided in Exhibit 3-2. They reflect the extensive coordination and administration associated with the Test Friendlies, and the complementary roles of the Pseudo-CLEC and CLECs. Each of the five areas of the FT had an extensive set of entrance and exit criteria. FT phases included test planning, test preparation, test execution, test analysis and reporting. FT phases are described in Exhibit 3-3. Exhibit 3-3 also discusses the Performance Measurement Audit. All exit criteria had to be satisfied before the FT was deemed complete.

[15] A very detailed and comprehensive discussion of the FT, including all relevant findings and conclusions can be found in CGE&Y's Final Report at pps. 33 through 189.

[16] Comparisons of functions in the retail and resale environments were done in conjunction with the Retail Parity Evaluation.

b. Ordering is the process that involves the creation, submission and acceptance of the CLEC's LSRs or ASRs to Qwest's OSS interface.

c. Provisioning consists of the processes that Qwest uses to install the service or facility ordered, or otherwise implement the CLEC order. It also includes all associated transmission, wiring, and equipment necessary to provide service to an end user.

d. Billing is the process by which Qwest provides CLECs with wholesale bills, usage data and records for the services, network elements (e.g., loop) and features that are ordered and provisioned.

e. Maintenance and Repair is the function whereby CLECs diagnose and troubleshoot customer-reported troubles, report troubles, open trouble tickets, inquire on the status of trouble tickets, and close trouble tickets.

80. The scope of the pre-order test was to review the following transactions:

a. CSR Query allowing the CLEC to view an end-user's current service record
b. Address Verification query
c. Reserve Telephone Number (TN) function
d. Service and Feature Availability query
e. Appointment Scheduler Function
f. Facility Availability query
g. Loop Qualification query

The pre-order process also verified the appropriateness and timeliness of reject messages as well as a successful connection to the pre-order system.

81. The scope of the FT for ordering and provisioning activities encompassed the following:

a. Testing of Qwest's interfaces and order entry systems to ensure the ability to receive LSRs
b. Transmission of multiple order types[17] by the Pseudo-CLEC to Qwest[18]

---

[17] Business and residential orders were tested and testing encompassed New, Conversion 'As Is', Conversion 'As Specified', Partial Migrations, Change, Disconnect, Cancel, Suspend, and Restore activities. Test cases involved end-to-end processing, so that all functionalities between preordering and billing could be evaluated.

[18] The FT encompassed a defined number of inputs and set of scenarios. These scenarios involved specified types of orders and products, included for completeness within the scope of Section 271 testing. The FT also addressed special situations such as 911/E911 and Directory Assistance functions. Development of scenarios entailed: scenario definition, preparation of detailed test scripts, formulation of

c. Qwest's transmission of acknowledgements, i.e., rejects, jeopardy notifications, FOCs, and SOCs
d. Validation that each order was provisioned as specified in the order
e. Processing of flow-through and non flow-through orders

82. The scope of the Maintenance and Repair evaluation was to determine the following:

a. Whether Qwest's systems generated a timely and accurate trouble report
b. If the Pseudo-CLEC or participating CLEC could perform a Mechanized Loop Test (MLT) for a reported trouble
c. If the MLT provided the Pseudo-CLEC or participating CLEC the appropriate information
d. Whether the Pseudo-CLEC or participating CLEC could obtain the status of a trouble ticket
e. Whether Qwest notified the Pseudo-CLEC or participating CLEC of successful restoration of service after the service fault was identified and corrected
f. Whether the Pseudo-CLEC or participating CLEC could retrieve a customer's trouble history, as applicable

The M&R evaluation focused on the following two primary interfaces available for CLEC Maintenance and Repair: Customer Electronic Maintenance & Repair ("CEMR") - a proprietary web-based GUI application designed by Qwest; and Electronic Bonding - Trouble Administration ("EB-TA") - a gateway interface with associated programming and business rules that allows CLECs to design their own GUIs for conducting M&R activities with Qwest.

83. The scope of the Billing test was to verify the following:

a. The bills reflected what was actually ordered
b. The bills contained accurate charges
b. Rates were applied correctly
c. Taxes and surcharges were assessed correctly
d. Discounts and adjustments were performed correctly.
e. Prorated amounts were charged accurately according to the disconnect date.
f. Disconnects were processed and appeared accurately on the bill.

---

test cases involving different types and combinations of orders and products within a scenario, and performing additional test script iterations, as necessary to increase sample sizes. Development of FT scenarios is discussed in Appendix B. Test Cases included appropriate (the number of accounts, types of transactions, and test iterations) instances and iterations covering the order types and product types, as detailed in Appendix A of the TSD.

g. Daily Usage Files (DUF) were updated accurately.

84. In addition, the FT generated data used in the statistical evaluation to determine whether Qwest met the performance measurements defined in the Arizona PID, Version 6.3, as required in Appendix C of the MTP.

85. The FT encompassed all OSS functions associated with resale, UNE-P, UNE-Loop, UNE-Loop with Number Portability, and Number Portability. The scenarios tested were designed to replicate a mix of resale and Unbundled Network Elements (UNE) order activity for a start-up CLEC in the Qwest Arizona serving area. The Arizona test was unique in that rather than submitting all order types in one batch, a mix of resale and UNE orders were submitted which more closely matched what actually occurs in the real world.

86. In total, 1,567 orders were issued. The specific "products" associated with the various testing scenarios are provided in Exhibit 3-6. This Exhibit illustrates the extensive breakdown of orders within each scenario. Of note are the practical limitations encountered in obtaining adequate samples within some product strata, in spite of expanding the number of orders placed by over 300. In cases where only a minimal sample population was obtained, each case was scrutinized in even greater detail to ensure the integrity of the sample.

87. In addition, the TAG agreed that CGE&Y should evaluate the following "Emerging Services": Enhanced Extended Loop ("EEL"), Unbundled Dedicated Interoffice Transport ("UDIT"), Unbundled Sub-Loop, Unbundled Dark Fiber, Line Sharing and Line Splitting. Many of these tests consisted largely of documentation reviews since no CLEC in the Qwest region was ordering any of these wholesale service products at the time. Procedures that CLECs would use to order Qwest Emerging Services were evaluated based upon documentation and procedures at the "Qwest Wholesale Services" web-site.

88. Thus definitive evaluations based on Transaction Tests could not be made within the OSS Test Plan time frame.[19] The results of the document review were deemed to be satisfactory. The TA's evaluation of procedures included all of Qwest's ordering and other related documentation for its Emerging Services.

b. <u>CGE&Y FT Test Results</u>

89. During the course of the FT, documentation, process, training and system issues were encountered. These were addressed through the generation of IWOs, which were all closed out. A total of 113 IWOs were processed in the FT. These were associated with OSS improvement (29), system tables (7), training updates (22), procedural changes (20), changes to metric (26) and documentation improvements (9).

[19] As a result, if selected OSS tests for emerging services were required, these would be completed pursuant to the core test program.

90. From that point FT testing focused on meeting established PID criteria. The set of 29 PIDs evaluated in the FT is shown in Exhibit 3-4. The PIDs covered the gamut of functions deemed necessary by the CLECs to achieve "functional equivalency" with Qwest. Each set of PIDs also had sub-measures or disaggregations that were also evaluated. [20]

91. Results of the FT and related performance measures are enumerated in Exhibit 3-7. In summary, it was determined that:

a. OSS systems provide functions necessary for CLECs to provide customer service.

b. Functional capabilities include issuing and completing service orders, providing maintenance and repair services, and billing customers. This was established for the full scope of products tested.

92. Key results are highlighted and implications for computation of the PIDs are noted. Results indicate that the functionality was achieved. Exceptions are noted in Exhibit 3-7. In these cases IWOs were issued, corrections implemented and IWOs were subsequently closed out. Limitations imposed on the PIDs are cited, and the ramifications are considered in subsequent discussion of PIDs results. No limitations or ramifications were deemed material.

93. Findings for Emerging Services are provided in Exhibit 3-8.

94. Comprehensive FT performance results, upon which FT success is based, are provided in Exhibit 3-9, and summarized in the following paragraphs. The description of each measure is provided, together with principal findings reflected in CGE&Y's Final OSS Test Report. Data from CGE&Y's FT Results Comparison Report are also included. This provides a comparison of results obtained using Pseudo-CLEC's data with results achieved using Qwest's ad hoc data, and is a means of validating source data used to provide monthly performance measure results.

95. Qwest performance measurements for wholesale customers was determined to be on a par with performance measurements for retail customers. In cases where commercial data was inconclusive, analysis was augmented by data obtained from Pseudo-CLEC and aggregate CLEC's.

---

[20] FT scenarios were structured to obtain PID results within specified statistical confidence levels. The number of tests conducted was intended to be sufficient to achieve these statistical confidence levels within each "strata" or "cell" to be evaluated. When the various combinations and permutations of services to be provided and conditions were taken into account, 1,267 scenarios were planned to be run. The breakdown of scenarios by service type and orders planned is shown in Exhibit 3-5. This reflects the scale and scope of the planned test.

96. Results for 221 individual performance measurement "product disaggregations" were obtained, enabling detailed breakdowns of interest to the CLECs to be scrutinized. These included preorder, order, provisioning, maintenance and repair, and billing classifications, as follows:

a. Fifty-five disaggregations addressed pre-order related activities including the flow-through percentage, percentage and timeliness of rejection notices, FOC timeliness, work and billing completion notification timeliness, jeopardy intervals and timeliness. These disaggregations were compared with "parity" or "benchmark" standards. Pseudo-CLEC results equaled Qwest results or met the benchmark for all but three disaggregations; these were: manually returned rejection notices submitted via EDI, resale aggregate FOCs received via EDI and returned manually; and timely UNE-P jeopardy notifications; none of which were material

b. Eighty-seven individual product disaggregations related to ordering and provisioning, including the percentage of installation commitments met, the average installation interval, new installation quality, average "delayed days," coordinated hot cut interval, and the percentage of coordinated hot cuts completed on time. When compared with parity or benchmark standards, Pseudo-CLEC results equaled Qwest results or met the benchmark for all but nine disaggregations; specifically dispatched and non-dispatched residential and "designed" ISDN BRS installation commitments met, installation intervals for dispatched business, non-dispatched Centrex, ISDN BRS, PBX, and UNE-P, and designed ISDN BRS installations; none of which were material.

c. Seventy-five individual product disaggregations related to maintenance and repair. These encompassed the percentage of out-of-service troubles cleared within 24 hours, the percentage of all troubles cleared within 48 hours, the percentage of "designed troubles" cleared within four hours, the mean time to repair, the repair repeat report rate, the trouble rate, the percentage of repair appointments met, and the percentage of customer related trouble reports. When compared with parity or benchmark standards, it was determined that Pseudo-CLEC results met the benchmark for all but four disaggregations; specifically non-dispatched UNE-P out-of-service troubles cleared within 24 hours, non-dispatched UNE-P mean time to restore, and dispatched and non-dispatched UNE-P repair appointments met; none of which were material.

d. Four individual product disaggregations related to billing, including the time to provide recorded usage records, invoices delivered within 10 days, bill accuracy, and bill completeness. When compared with parity or benchmark standards, it was determined that Pseudo-CLEC results equaled Qwest results or met the benchmark for all but a single disaggregation; specifically, invoices delivered within 10 days. This single case was not material.

97. In all cases IWOs were issued to rectify performance shortcomings. It was determined that Qwest had subsequently instituted corrective measures to address all of these issues and/or performance had improved to benchmark or parity during the course of the retest.

c. Position of the Parties

1. The CLECS

98. CLECs contend that the TA failed to conduct the FT and supporting analysis as was required, and came to conclusions that were not supported with sufficient facts. CLECs argue that the TA did not perform the FT as the MTP and TSD required and assert that:

> "In case after case the TA ignored controlling documents and made no finding because it had conducted no analyses or testing. This was despite a clear requirement to conduct certain tests, to analyze test results, to issue reports on such tests and results, and to publish information about its testing."

99. Also, CLECs assert that conclusions the TA reached were not necessarily relevant to the Commission's conclusion as to whether Qwest provides non-discriminatory access to its OSS.

100. Specific instances cited by the CLECs included the following:

a. **PO-1 Evaluation** - CLECs contend that, despite the requirement to do so, TA did not provide an evaluation of Qwest's preordering system as to "response times," measured in PO-1.

b. **Evaluation of Preorder/Order Integration** – CLECs contend that the TA did not evaluate Qwest's EDI interfaces for integration quality, despite the MTP and TSD requirement to do so. Integration quality of pre-order and order data was to be evaluated during the FT, which was not done.

c. **Conduct of Billing Tests** - CLECs contend that TA failed to conduct billing tests required by the MTP and TSD. They argue that the TA performed an incomplete evaluation of the Daily Usage Files ("DUF") that provide the details of calls made by the Friendlies on the lines established by the Pseudo-CLEC. CLECs assert the TA did not evaluate the form, format and content of Qwest's DUF against Qwest's specifications to determine whether Qwest's electronic records conform to the documented specifications for DUF transactions. As a result, there were no findings as to whether a CLEC can rely on Qwest's documentation to develop and implement a system to validate DUF provisioning by Qwest.

e. **Provisioning Errors** – CLECs assert that the TA under-reported provisioning errors made by Qwest in the implementation of Pseudo-CLEC LSRs, and did not report experiences in implementing resale services in the same manner as for other services.

f. **Service Provisioning Failures** - CLECs cite "verification of provisioning" as a critical component in the tests and assert that the TA did not utilize the service validation methodology required by the TSD. The TSD provides that the TA will access Qwest's switch and compare feature/functionality via the IMA-GUI "Maintenance and Repair (M&R) - Feature Availability" function and compare switch data to the LSR to validate the accuracy of provisioning.

g. **Time Lags in Issuing Subsequent LSRs** - CLECs claim they cannot issue subsequent LSRs until Qwest's customer service records are updated to reflect Qwest's processing of the original request. Specifically, if a CLEC end-user were to make a request to augment their new services immediately after the initial migration order has been processed (e.g., add features, change directory listings, or request additional lines to be installed) the CLEC could not format an LSR for the customer until a new Customer Code had been obtained from Qwest.

h. **Recalculation of Qwest-Reported Results Using Pseudo-CLEC Data** – CLECs cite the MTP as imposing a series of requirements for the TA to "independently calculate Qwest's performance results so as to verify that Qwest's reporting is accurate and complete." CLECs state that TA was unable to comply with these requirements for a variety of reasons, not the least of which is the absence of Pseudo-CLEC data that is required for such recalculations. CLECs seek clarification as to the gaps between the "data that are required for recalculation" and "data that have been captured during the FT and Capacity Test."

i. **Relationship between Test and Retest Results** – CLEC's contend that TA's presentation of results from *re-testing* is inconsistent with its presentation of initial test results. CLECs suggest that, whereas *retesting* is to demonstrate that the original problem is fixed, similar analytical methods should have been applied and demonstrated.

j. **Basis for Parity Measures** – CLECs challenge the validity of data being used by the TA to declare parity. CLECs contend that, contrary to FT design, conclusions of parity were made less frequently on the basis of Pseudo-CLEC data than for commercial CLEC data. CLECs suggest that with respect to parity determination (rather than functionality verification) the advantages of third party testing appear not to have been attained.[21] CLECs conjecture that Pseudo-CLEC

[21] Of the 133 cases, parity was purportedly based on the analysis of Pseudo-CLEC data in only 37 instances, and only twice was a parity conclusion based exclusively on Pseudo-CLEC retest data. In 52 cases, parity was purportedly determined using commercial CLEC data, and 8 more parity determinations are based primarily on commercial CLEC data collected during retest. In 27 cases, no final determination

data, which should have the highest integrity, were generally in such low volumes that determinations had to be made using commercial CLEC data more often than anticipated. Further, CLECs observe that in 20 percent of the cases, no determination of parity was made because of insufficient data from either data source. CLECs express concern that the TA failed to take advantage of the Pseudo-CLEC resource by not achieving requisite sample sizes.

k. **Integrity of Pseudo-CLEC Results** – CLEC express concern that calculation of Pseudo-CLEC results using Qwest's ad hoc data are suspect "because Qwest's ad hoc data has been found to be improperly calculated by Liberty Consulting audits." CLECs contend that Liberty's Colorado and Nebraska findings have called into question the accuracy and reliability of Qwest ad hoc data. CLECs also note the possibility that other such findings and conclusions may be reached after Liberty has completed the analysis of Minnesota, Nebraska, Oregon, Utah and Washington results.

l. **Absence of Daily Logs** – CLECs assert that the TA's failure to maintain Daily Logs "has undermined the integrity of the entire FT." CLECs contend that the Daily Logs were designed to be the vehicle by which CLECs would be able to monitor the progress of testing in an efficient and non-intrusive manner. They argue that, the absence of the daily logs prevented them from analyzing the TA results data.

m. **Lack of Valid Audit Controls** – CLECs observe that "CGE&Y was tasked with not only executing the required order number and types, but also was required to have the ability to track the history of each order so that life cycles would be understood from pre-order through billing." CLECs assert there is no evidence in the FT section of the OSS Test Report or supporting documentation that validates that CGE&Y employed such audit control procedures. CLECs contend evidence is provided that suggests, to the contrary, valid audit control mechanisms were not employed by CGE&Y, which has resulted in discrepancies that have not been adequately explained or documented. CLECs cite, as an example, that the target test range was established at approximately 1,620 to 1,890 tests, when only 1,567 tests were conducted.

n. **Inability to reconcile conclusions reached based on CGE&Y's supporting documentation.** -- CLECs contend that the Final OSS Test Report has not provided evidence necessary to understand how CGE&Y was able to draw conclusions are based solely on the evidence on hand.

2. Qwest's Position

101. Qwest responded that CGE&Y satisfied the MTP and TSD requirements in performing the Functionality Test. Qwest stated that the MTP vests solely in

---

was made because of insufficient data to attain statistical significance. In 7 cases, a disparity result was never clearly resolved even after retesting.

CGE&Y the responsibility for supervising the day-to-day execution of the test, and analyzing test results and reporting its evaluation of those results. The MTP requires that CGE&Y apply that experience and judgment in fulfilling its supervisory duties. CGE&Y conducted the test in a reasonable manner consistent with the TSD and MTP requirements and appropriately exercise its professional judgment as the Test Administrator.

102. Qwest dismissed the CLEC's arguments regarding the daily logs. Qwest states that the CLECs received the information on a delayed basis as a result of an agreement in the TAG. Moreover, Qwest pointed out that all of the databases that contained the detailed information that was summarized in the reports was available for CLEC review in CGE&Y's document control room. Qwest also notes that there was no requirement for CGE&Y to provide any particular content or format.

103. Qwest acknowledged that it experienced a problem with ADUF records initially, and that it identified and fixed the problem. However, this resulted in the Pseudo-CLEC not receiving any ADUF records from Qwest until approximately August, 2001. CGE&T committed to obtaining the ADUF files from HP, comparing those files to the call logs that detail the calls made during the test to generate usage and including its analysis in the final report. Qwest stated that this commitment will satisfy the MTP and TSD requirements.

104. Qwest dismissed the CLECs arguments that CGE&Y should also have tracked the status of LSRs through issuance of post-order queries. In addition to tracking test order status through the notifiers, the Pseudo-CLEC received auto-pushed messages regarding the status of test orders. Qwest stated that it expended significant effort to implement the capability to provide proactively pushed messages. Qwest argued that the CLEC's claim that CGE&Y should also have tracked the status of LSRs through issuance of post-order queries would have constituted a third layer of tracking information that would have returned the same information as the notifiers and auto-pushed status messages.

105. With regard to preorder to order integration, Qwest noted that CGE&Y indicated that it evaluated the preorder to order integration quality on Qwest's graphical user interface by observing that minimal re-entry of data was required to successfully complete the order. Qwest also noted that HP was conducting an analysis that would evaluate at the data element level a CLEC's ability integrate preorder and order data using Qwest's EDI interface.

106. Qwest argued that it provided SOC information in two ways through the status and/or proactive electronic messages and on the Loss and Completion Report. Qwest argued that CGE&Y clearly stated in its Performance Acceptance Certificate for IWO 1045 that it validated both of these delivery methods.

107. Finally, Qwest argued that WorldCom's argument that there was a "gap" in CGE&Y's billing analysis because it did not validate any debit adjustments

was flawed. Qwest pointed out that the TSD contained no requirement that both debit and credit adjustments be verified.

e. **Discussion and Staff Recommendations**

109. Staff agrees with its Test Administrator's findings and the conclusions regarding Qwest's performance on the Functionality Test. There were doubtless many problem areas and concerns identified by the CLECs at the interim Functionality Test workshop. However, at that time retesting had not yet been conducted. Many of the CLEC's concerns were resolved through additional retesting subsequently performed by CGE&Y. Additionally, many of the CLEC's concerns that were exhaustively discussed at the interim Workshop, were subsequently addressed by CGE&Y and Staff.

110. Staff's responses to the specific CLEC concerns are as follows:

a. **PO-1 Evaluation** - Staff disagrees with the CLECs' position. It was agreed by all parties that the pre-order response times would be evaluated in the Capacity Test (CT). The TA evaluated response times in that test (See Section 5 of this report). The data reported in the FT in Table 2.1.4a of CGE&Y's report were obtained using an outdated Templar Interactive Agent (IA). The parties were aware that this IA did not meet benchmark response times precluding use of FT data to evaluate PO-1.

b. **Evaluation of Preorder/Order Integration** - Staff became aware in the Relationship Management Evaluation workshop that the pre-order to order integration analysis had not been performed. The TSD in Section 6.5.2.3 specifically required that the pre-order to order integration be evaluated. Staff concurs that this is of extreme importance to the CLECs in developing their EDI interface.

Staff requested that HP (the developer of the EDI interface for the test) perform this evaluation. The HP analysis was furnished to the parties in December 2001. In the "Final Report Workshop" in January the CLECs complained that the evaluation was performed on the older IMA release 6.0 which was based on a Local Service Ordering Guidelines – Version 3 (LSOG 3) standard. They wanted an evaluation of the new IMA release 9.0, which is based on the more current LSOG 5 standard. Staff concurred and asked HP to evaluate the newer IMA release and to specifically evaluate the ability to "parse" a Customer Service Record into an LSR. This report was completed and furnished to the CLECs.

HP's report analyzed the ability of a CLEC to integrate preorder to order transactions for the Qwest IMA-EDI system. The analysis covered two major Qwest software releases and a combination of five products and three activities. HP concluded that for both releases, data definitions (i.e., form, format, content, usage and meaning) between preorder and order elements generally do not require

translation or reconfiguration of the data elements when parsing preorder transactions into order transactions.

- HP determined that for software IMA Release 7.0 CLECs could utilize Qwest's EDI preorder transactions to automatically populate an order with some data manipulation. HP observed that Qwest is meeting the LSOG 3 industry standard for orders.

- HP observed the same findings for IMA Release 9.0. The report also found that a CSR can be parsed and automatically populate an LSR.

Staff believes that this HP report adequately addresses the CLECs concerns.

c. **Conduct of Billing Tests** - Staff concurred with the CLECs and requested that CGE&Y conduct a retest. CGE&Y has, as a result, conducted an extensive supplemental billing analysis/evaluation to address this issue. IWOs were issued, problems resolved and all IWOs closed out.

d. **Provisioning Errors** - Staff believes that the accuracy of Qwest's provisioning has been verified through the data reconciliation. Specifically:

- Of the 63 trouble tickets submitted via CEMR, 40 trouble tickets were planned and 23 trouble tickets were unplanned troubles. Of the 23 unplanned troubles, the customers identified 18 and 5 were identified during the UNE Loop testing phase. All but 7 were successfully accepted by CEMR.

- Seven test cases were rejected by CEMR for a variety of reasons, prompting issuance of three IWOs (AZIWO2101, AZIWO2102 and AZIWO2103) which were subsequently closed.

e. **Service Provisioning Failures** - Staff notes that CGE&Y contended it successfully achieved service validation by having Friendlies exercise these features to test operability. CGE&Y retrieved and verified CSRs, and validated that the services and features ordered were accurately reflected on the bill.

Staff further understands that the requirement to utilize the IMA-GUI M&R Feature Availability function was satisfied during the DUF retest, which CGE&Y utilized in the manner described by the TSD to "access Qwest switches to verify provisioning." All test cases that were verified were correctly "translated" in the respective Qwest switches with features specified on the LSR.

Staff believes that the test process along with the DUF retest satisfies TSD requirements.

f. Time Lags in Issuing Subsequent LSRs - Staff notes that CGE&Y conducted a retest of this problem (per AZIWO 2060) and submitted 11 conversion orders to determine the interval for the Reseller Identification (RSID) to be posted to the CSR. CGE&Y established that 8 of 11 CSRs (73%) were updated on the third day after the SOC date. The remaining three CSRs (27%) were updated on the fifth day after the SOC date. CGE&Y found that the CSR information was correctly updated on all 11 CSRs within the established 3-5-business days guideline, (the normal interval to update POTS) and subsequently closed this IWO.

In addition, CGE&Y validated Qwest's published "work-around procedure," used when a CLEC encounters this problem. (This process is used by a CLEC in response to a "Not authorized to retrieve CSR" error.) CGE&Y also ascertained that error messages were incorporated in IMA, decreasing the time a CLEC would otherwise be required to spend investigating the cause of errors received when retrieving CSRs.

CGE&Y attests that CLECs can process subsequent change orders when following guidelines provided by Qwest, prior to the CSR update.
Staff believes that this concern has been adequately addressed.

g. Recalculation of Qwest-Reported Results Using Pseudo-CLEC Data - The Staff concurs with the CLECs that this issue is a major concern. One of the most important outcomes of the OSS test was verifying that Qwest-reported commercial performance data is accurate and can be relied upon. Staff has spent considerable time in conjunction with the TA ascertaining that Pseudo-CLEC data are utilized in the "data accuracy verification" process. To address the parties' concern about the extent of the data mismatch, the TA prepared the "PID Data Element Summary" report. [22]

The observed mismatch resulted from a limitation encountered in utilizing Pseudo-CLEC data to calculate PIDs, in that Qwest does not furnish CLECs with all of the disaggregated data elements that would be required. To preserve the element of "blindness," the TA did not request any special daily performance reports from Qwest. To accomplish the requirement of using the Pseudo-CLEC data in verifying PID calculations the TA:

- Reconciled Pseudo-CLEC "actual data" with Qwest "ad-hoc data," Qwest's database used for calculating PIDs. (For example, this reconciliation matched Pseudo-CLEC LSRs with LSRs contained in the ad-hoc database). The results of this verification were provided in the TA's "Data Reconciliation Report for the Functionality Test."

[22] The extent of the effort of the TA is described in the "Performance Measurement Evaluation" Section of this report.

- The TA provided independent calculations of aggregated PID measures utilizing Pseudo-CLEC data. In this analysis, disaggregated data were "rolled up" to common levels of aggregation where a one-to-one correspondence between the Pseudo-CLEC and Qwest ad hoc data sets could be achieved. These calculation verified data elements within the LSRs, including, for example, application dates, due dates, completion dates, etc. The results from this effort are contained in the "Functionality Test Results Comparison Report."

h. **Relationship between Test and Retest Results** - Staff is of the opinion that the TA's retesting approach was satisfactory. The retesting plans were submitted to the CLECs for their review and comment. The CLECs had every opportunity to critique retesting effort plans. The retesting was to target specific problem areas and not to redevelop statistical analysis utilized for the initial test. The staff believes the retesting demonstrated that the targeted problems were properly tested.

i. **Basis for Parity Measures** - Staff believes the TA has overcome this criticism in the Final Report. As described above, a significant effort was put into verifying that Qwest reported ad-hoc data were accurate. Based on the results of this verification the test results in the report were recalculated. These results, as reported in Functionality Test section of CGE&Y's Final OSS Report, should be accurate. More importantly, Qwest-reported commercial data have been audited and verified to be accurate. This provides assurance that service provided by Qwest to the CLECs is accurately reflected in Qwest Monthly Performance Report.

Staff strongly believes that audited commercial data are a better evaluation of Qwest performance than OSS test data, as commercial data reflect larger volumes and real world conditions.

j. **Integrity of Pseudo-CLEC Results** - Staff observes that, according to Liberty Consulting, information provided by CLECs for the state of Arizona "did not demonstrate that Qwest reports of its performance are materially inaccurate." Liberty found that Qwest did make some errors that affected performance results. "However, those errors were generally either at levels to be expected at the front end of the performance measurement process, where people must manually enter vast amounts of information; or appeared to a result of honest errors in judgment." Liberty states that "The amount of these errors in relation to the total amount of information required for the performance measures did not exceed what Liberty considers to be expected levels, even under a carefully operated set of measurement activities. Moreover, there was no evidence that Qwest purposely took steps to make its performance figures appear better than they actually were. Generally, errors were not systemic, nor did they apply to a significant percentage of the performance measure results."

Liberty conducted a study of similar Data Reconciliation Reports in the States of Colorado and Nebraska, which disclosed problems that impact Arizona as well. Qwest asserted that all anomalies have been identified and corrective measures have been initiated, with the expectation that these would be closed in short order. Qwest provided explanations as to the circumstances surrounding these issues and has demonstrated that its data are materially correct.

k. **Absence of Daily Logs** - Staff disagrees with this complaint by the CLECs. The TA provided in the viewing room (and by CD if requested) a complete "cradle-to-grave" accounting of all of its order activities, which contained all data that would have been posted to daily logs. Staff is satisfied that these data provide the CLECs all they need for test result verification. Additionally, logs were provided to the CLECs, and CGE&Y made every effort to accommodate the CLEC requests as to form and content.

l. **Lack of Valid Audit Controls** - Staff noted that CGE&Y entered information in the Return Order Log spreadsheet, which provided cradle-to-grave tracking for all LSRs. In addition, matters related to "data accuracy assurance" were addressed across-the-board as a primary OSS Test objective. With documentation of the preceding items, furnished by CGE&Y, Staff is satisfied with audit controls employed by CGE&Y.

Further, Staff observes that CGE&Y conducted an additional 223 tests during the course of re-tests, bringing the total number of tests conducted to 1,790 – towards the high end of the target range. The total number of tests satisfactorily met the TSD projected test volumes. Staff is satisfied that the TA fulfilled TSD projected test volumes.

m. **Inability to reconcile conclusions reached based on CGE&Y's supporting documentation.** -- ACC Staff disagrees with this sweeping generalization. Rather this can be addressed only on a case by case basis to provide a purposeful response. CGE&Y's Final OSS Test Report provides closure on issues that were still being addressed during the course of interim reports, and the CLECs had adequate opportunities to scrutinize detailed results in viewing rooms and pose questions during the course of the workshops. Substantial discussion is provided in IWO Performance Acceptance Certificates, so specific conclusions are addressed in conjunction with closeout of each IWO.

111. In the preceding paragraphs, Staff has responded to each FT concern expressed by the CLECs. Staff is of the opinion that the collective impact of FT improvements enables the CLECs to derive full benefits of the functional capabilities which are intrinsic to Qwest's OSS. This contrasts with conditions encountered by the CLECs at outset of the FT, in which much of the underlying potential of the OSS was, in practical terms, denied as a result of the numerous aforementioned process-related deficiencies, which were subsequently cured.

112. Staff believes that CGE&Y planned, implemented and reported on the FT in an appropriate manner. Staff also believes that CGE&Y's methods for data collection and analysis were appropriate, and that data utilized and reported on were accurate.

113. Staff also supports the following recommendations of the Test Administrator relative to the Functionality Test:

a. CGE&Y recommends that Qwest explore the inclusion of addition edits of CLEC LSRs, within the Business Process Layer (BPL) of the gateway systems, prior to issuance of a FOC. This recommendation suggests that increased edits in Qwest gateway OSS would likely result in lowered initial LSR rejection rates, improved CLEC order processing, and the reduction of rejects after a FOC. This issue was initially discussed in AZIWO2116, and Qwest has implemented improvements. (Recommendation No. 3)

b. CGE&Y recommends that, through the CMP, Qwest improve the timeliness of record updates from Qwest's provisioning systems to the various downstream OSS in regard to customer conversions wherever such improvements have not already been put in place. Delays in downstream record updates can potentially add additional steps to CLECs' business processes. This recommendation is based on AZIWO2060, which is discussed on page 76 of this report. (Recommendation No. 4)

c. CGE recommends that the CMP consider the following process improvements:

- Qwest provide the CLECs with a complete listing of the services and features on any CLEC-initiated order, as entered in Qwest's Service Order Processor (SOP). This recommendation should apply for any CLEC order type, whether flow-through or non-flow-through. This recap should include information such as USOCs, FIDs, Hunting Sequence, etc. This suggestion calls for the Service and Equipment (S&E) section of the Service Order to be returned to the CLEC as entered in the Qwest Sop. This is currently under evaluation by the CMP.

- Explore and develop an automated process that would allow CLECs to view the status of service orders initiated by Qwest on CLEC owned accounts. This recommendation suggests that CLECs be provided with the opportunity to view orders, determine the status of orders, and monitor the progress of those orders through the Qwest OSS so that CLECs can more effectively support the needs of their end users.

- Continue to improve the Service Interval Guide (SIG) to provide clearer and more detailed information for CLECs on disconnect intervals, and to make the information easier to locate on the Qwest wholesale website. (Recommendation No. 6).

d. CGE&Y recommends that Qwest update their Wholesale website with clear standards and business rules pertaining to CLECs use of the FOC. These standards/business rules should clearly articulate how a CLEC is to differentiate FOC, Jeopardy notice, Reject notices, and any/all other notifiers. CGE&Y also recommends that Qwest publish standard error-handling information and provide it to CLECs on the wholesale website in a table format. This would include more detailed information on Non-Fatal and Fatal errors, making the wholesale website a more detailed and complete reference point for CLECs. Although the Qwest White Paper "Firm Order Confirmation Evaluation Results," dated August 6, 2001 provides guidance, the continued development of reference material to assist the CLECs in distinguishing and preventing errors would benefit all parties. The issue of distinguishing error messages is also discussed in Appendix R of this report, Arizona Section 271 Performance Indicator Definitions (PID) Data Elements Summary Reports, specifically in the HP Missing Functionality Data Elements Spreadsheet.

114. In summary, Staff recommends that the ACC concur with and support the CGE&Y reported FT results, and CGE&Y's recommendations.

2. RETAIL PARITY EVALUATION

a. Test Objectives and Process

115. The purpose of the Retail Parity Evaluation (RPE) was to determine whether a CLEC representative, using a Qwest OSS interface, could provide a level of service and experience in substantially the same time and manner as the level of service and experience that a Qwest representative could provide using a Qwest standard interface.[23] In this regard, the Retail Parity Evaluation compared:

a. The Qwest graphical user interface (GUI) and electronic data interface (EDI) provided to CLECs for processing pre-order inquiries, LSRs and repair requests, to

b. The Qwest internal retail graphical user interface utilized by Qwest's Service Order Representatives.

[23] A very detailed discussion of the RPE, CGE&Y's findings and conclusions are contained in CGE&Y's Final Report at pps. 190 through 260.

This involved determining if Qwest OSS, when accessed by the CLECs, collected and provided required information in substantially the same time and manner as information submitted and received internally by Qwest.

116. The RPE is unique to the Arizona OSS Test and was intended to:

a. Establish whether the information received by the CLEC Service Representative from the Qwest OSS was comparable in quality and completeness to the information received internally by the Qwest Service Representative.

b. Determine if the data entry experience of a CLEC Service Order Entry Operator was comparable in quality and required level of effort to that experienced by the Qwest Service Order Entry Operator.

c. Compare the degree of integration of "pre-order" and "order" functions in retail to the degree of integration of resale interfaces.

117. The RPE involved flow-through of LSRs with "correctly entered" order information to ensure acceptance and presentation to back-end systems.[24] The degree to which correctly entered LSRs submitted by a CLEC "resale" Service Representative flowed through the Qwest OSS infrastructure, contrasted with correctly entered LSRs submitted by a Qwest "retail" Service Representative was a key element in determining whether parity was in fact achieved. The scope of the RPE is provided in the list of Success Criteria listed in Exhibit 4-1. These criteria reflect the wide range of measures that were considered by CGE&Y in judging whether or not parity has been achieved.

118. A specific set of Test Scenarios with Retail analogs was used for the Retail Parity Evaluation. These tests covered preordering, ordering, and maintenance and repair scenarios. In general, each CLEC Test Scenario had a corresponding Qwest retail scenario to conduct a functionality comparison.

119. The Retail Parity Evaluation was both a quantitative and qualitative test, with emphasis on "qualitative" aspects.

a. It was "qualitative" in that the information available to a Qwest representative handling a customer was contrasted to that available to a CLEC representative, in terms of both "equivalency" and accuracy.[25]

b. It was "quantitative" in that it evaluated OSS response times on a comparative basis, with allowances for underlying differences in process.

[24] Flow through in the context of these retail parity evaluations did not include testing of how well orders were provisioned or billed. Therefore, test cases for retail parity were cancelled before provisioning occurred.

[25] Quantitative differences associated with system response time would generally be small in comparison to an end-to-end transaction as a whole, and hence would not be material.

Some underlying differences were anticipated, but these differences were not to materially impact the effectiveness of the CLEC representative towards realization of success criteria.

120. The focus of the RPE was the "experience that the customer had" while on the line with a CLEC representative, in comparison to the experience of a customer while on the line with a Qwest representative. Once the order had been submitted it was only necessary to run the RPE through either the ordering process or through submission of a trouble report. As such, the RPE activities were cancelled before triggering the Service Order Processor (SOP).

a. The RPE included standard pre-order and ordering functionality, as well as other information needed to address customer requirements, such as order status, escalations, and obtaining preferential/vanity numbers.

b. Quantitative pre-order metrics encompassed telephone number (TN), feature validation, address validation, primary interexchange carrier/local primary interexchange carrier (PIC/LPIC), due date, and facility availability. Query times were measured and reported for all "Pre-Order" Test Cases and Pre-Order portions of all "Order" Test Cases.

121. Metrics were collected as detailed Test Cases and Qwest Service Representatives (for retail) and Pseudo-CLEC Service Representatives (for resale) executed Scripts. Qwest systems and databases used by the CLECs are described in Appendix A. RPE phases are discussed in Appendix C of this report.

122. Due to structural differences described in these Appendices, "complete parity" is not realizable. At issue is the extent to which "virtual parity" from the customer's perception is achieved, hence the emphasis on the qualitative issues. Quantitative measures had nevertheless been explored to "ascertain the nature and extent of delays" and "put the issue to rest" if these structural difference were not material.

123. Section 2 of Appendix A of the TSD enumerates Test Scenarios employed in the RPE. These scenarios were used to create detailed Test Cases and subsequent orders and LSRs. The scenarios covered preorder and order processing, for "Resale New Connect" compared to "Retail New Connect;" "Retail to Resale Conversion" compared to "Retail Win Back"; "Resale Change" compared to "Retail Change"; "Resale Suspend and Restore" compared to "Retail Suspend and Restore"; and various Resale Maintenance and Repair Activities (e.g., Reporting, Start Using, MLT) compared to equivalent Retail counterparts.

124. Appropriate test volumes were established to ensure that the "comparison process" provided a reliable statistical sample of performance measurements for evaluating processes and outputs. As planned, the volumes required were a subset of those of the overall FT. The number of accounts, transactions, and test iterations were explicitly determined by the TA to ensure the adequacy of the test volumes.

125. The goal of the RPE was to evaluate resale transactions against the equivalent retail transactions. This effort entailed use of "Test Accounts," involving Friendlies. Basic account set-ups and locations were similar to provide the most accurate comparison. For example, a test that scheduled appointments for dispatch of an installation technician was designed to be equivalent for "retail" and "resale" customers. It was therefore desirable to service these accounts out of the same wire center with Friendly locations as geographically close to one another as possible.

126. Data are compiled in response to "CLEC resale" and "Qwest retail" events. Sufficient numbers of accounts were established and tested to reach the required sample size, thereby ensuring statistical soundness to the extent practical. Like the FT, the RPE was conducted in a "production environment." Qwest participants (e.g., customer service representatives) who were actively involved with the tests, maintained the required level of 'blindness' by not knowing which accounts were actually "in production" as distinct from "production-like test accounts" employed in the RPE.

b. CGE&Y RPE Test Results

1. Qualitative Measurement Results

127. CGE&Y found that the RPE demonstrated that the quality and quantity of information obtained by CLECs through pre-order queries were substantially the same as that obtained by Qwest through similar queries; and that the overall experience in submitting an order was also substantially the same for both. Specific findings are presented in Exhibit 4-2. Shown in the Exhibit are the broad scope of qualitative evaluations and the high level of parity with retail services "across the board." These qualitative analyses addressed: no unasked-for changes; comparability of time; pre-order integration, complex services; data presented on screens; facility availability; reserving large blocks of telephone numbers; service installation; expediting due dates; vanity telephone number; change pending order; query status of impending order; status of "working left-in" information; system availability; and edit and error checks.

128. The primary emphasis of the RPE, as delineated in the MTP, was the qualitative aspect of the test, which by its very nature is imprecise. Sound judgment and intuition are often the best measure for a "heuristic" type of analysis. Substantial qualitative data has been gathered during the RPE in this regard, as shown in Exhibit 4-2.

2. Quantitative Measurement Results

129. Resale and retail businesses use the same back-end systems to process queries and order transactions. The architecture was found by CGE&Y to be sound and reasonably consistent with other models used in the business-to-business and the third-party "trading partner" software industry. The IMA architecture that allows CLECs to access Qwest's back-end systems was determined to be appropriate in preserving the integrity and security of these systems. Factors influencing system relative response times between resale and retail are as follows:

a. Network Access Times - To put time delays in context, creation of an LSR would typically be in the range of from 20 to 30 minutes. However, in relative terms, differences – in seconds -- between resale and retail response times do occur. These are not attributable to quality of service-related factors, but are network access- related. [26]

b. Processing Time - Disparities in processing times between resale and retail queries were largely attributable to the topology of the respective networks involved. [27] The end-to-end topology of a CLEC's interface with Qwest OSS, would likely be significantly different than Qwest's internal interfaces. For example, CLECs that interface with Qwest's back-end systems and databases via IMA-GUI require additional system processes not found in Qwest's retail architecture. This results in additional time between transaction initiation and completion – which is in accordance with generally accepted industry practices.

c. Number of Process Steps - As anticipated, for all services tested, the average number of steps required was inherently greater for resale than for retail. (In this context, a "step" is defined as any progression in an overall process such as "clicking a button," "moving to a new screen," etc.)

a. IMA-GUI Pre-order/Order

130. CGE&Y found that transactional delays associated with resale services relative to retail services are evident. Collectively, such delays in theory could occur multiple times during the course of an LSR or other end-user interaction. However, CGE&Y also found that the transaction routing and database queries, internal to Qwest's firewall, account for some or virtually all of the time differential.

131. CGE&Y found that although it may be possible for Qwest to make the mediation process for these interfaces even faster and more efficient, transactional delays over and above that of comparable retail systems are reasonable. By no means do such delays imply that CLECs do not have a meaningful opportunity to compete.

132. CGE&Y reported that when these delays, of seconds, are considered in the context of end-to-end transaction (e.g., generation of an LSR) these quantitative

[26] Resale response times were 2.2 times longer than retail (an average of 30 seconds versus approximately 13 seconds, respectively). However, a 15-second response time differential was attributable entirely to "http" web-related timing delays. When web http timing delays are eliminated, resale and retail experiences were substantially similar. A remaining two-second differential was attributable to validation (security) query response times.

[27] Qwest retail Order Management Centers connect to Qwest's legacy OSS and associated databases via QwestNet (Qwest Intranet), a series of dedicated high- capacity trunks. CLECs with dedicated OSS access are connected to the same network, either through dedicated T-1, fractional T-1, or 56kbps dial-up. With the exception of the dial-up method, the medium by which connectivity is accomplished is identical.

differences tend to be de-minimus. On balance, the experiences of a resale representative performing pre-order query transactions were similar to that of a retail representative performing similar activities using the internal OSS interfaces of Qwest.

b. IMA-GUI Maintenance and Repair

133. Unlike pre-order and order queries, M&R queries do not involve processing by the IMA systems. Rather, M&R queries are forwarded directly from the mediated access (MEDIACC) gateway for processing by Loop Maintenance Operations System (LMOS) and Work Force Administration (WFA). As such, there is greater similarity between the resale and retail M&R processes than for pre-order/order queries.

a. CGE&Y found that qualitative analysis determined that responses to resale and retail M&R queries provided comparable information. Functionality provided to resale and retail was substantially the same for generation of trouble tickets, MLT, trouble history, and trouble ticket status.

b. CGE&Y found that the number of fields and steps was approximately the same or fewer for resale than for retail, except for the number of fields required to create a ticket (work order) for non-designed services (POTS, CTX, PBX).

c. CGE&Y found that performing an MLT and obtaining a ticket's history took substantially longer (about 10 times as long). However, this was not material relative to the time associated with the M&R transaction.

c. EDI Pre-Order/Order

134. CGE&Y found that the quality and quantity of information obtained through EDI pre-order queries, and "the overall experience in submitting an order" was substantially the same as that obtained by Qwest through similar queries. The results of specific evaluation tests conducted across all timeframes and geographic areas are as follows:

a. Test Cases experienced no changes to order original due date, reserved TN, or selected features as to acceptance by the SOP (retail), and receipt of a FOC (resale).

b. Resale "Facility Availability" and Resale Appointment Scheduling queries produced substantially the same results as retail queries.

d. The procedure to reserve large blocks of telephone numbers involved manual process for resale and retail.

e. Test scripts were successfully conducted requesting due dates of 45 days from the date of order submission in both cases.

135. CGE&Y found that the ability to check the status of an order at any time through order completion was provided for resale and retail. Both systems provided error checks and indicators.

a. "Working left-in" lines were appropriately designated in all cases.

b. Hours of system availability were substantially the same.

d. EB-TA Maintenance and Repair

136. CGE&Y found that EB-TA M&R scenarios demonstrated comparability between resale and retail transactions as to information provided; functionality provided; MLT results received; trouble history provided; and trouble ticket status. The quality and quantity of information obtained, and the overall experience in submitting M&R transactions were substantially the same.

137. CGE&Y also found that based on the qualitative, quantitative, and timeliness measures:

a. The experience of a CLEC using the various available OSS interfaces is substantially the same as that of Qwest performing similar activities using internal OSS interfaces.

b. Qwest provides CLECs with non-discriminatory access to its OSS for the purposes of initiating service requests and M&R trouble transactions.

C. Parties' Position

1. CLEC's Position

138. First, the CLECs contend that there is insufficient evidence to reach conclusions as to retail parity, and to the contrary, evidence shows that Qwest is not providing CLECs with nondiscriminatory access to its OSS.

139. In support of their assertions, CLECs present a litany of arguments that the TSD has not been adhered to; evaluations were not properly conducted; the IMA-GUI does not provide comparable response times; certain parity tests were not conducted using EDI; sample sizes for conducting M&R evaluations were inadequate; and findings on the Quantitative evaluation portion of the RPE point towards a conclusion of disparity.

140. CLECs argue that the RPE has significant problems and testing methodologies were flawed. CLECs assert it takes much longer for CLECs to execute pre-order transactions; it takes CLECs many more steps and many more fields to create service orders; and key qualitative questions remain unanswered. CLECs contend evidence supports negative timeliness findings, negative quantitative findings, and inconclusive qualitative findings – which is inconsistent with the TA's overall positive

nondiscrimination finding. CLECs assert that still more testing is needed as the evidence overwhelmingly supports a finding of discrimination.

141. CLECs propose that Qwest's pre-ordering and ordering processes be modified to remove extra process steps and shorten response times so that the wholesale users of the IMA GUI have access to equivalent processes that operate without discrimination. Upon implementation of the process changes, the TA should re-test to determine whether the disparity has been removed.

143. Second, the CLECs state that CGE&Y's Sample Size during the Evaluation of the Timeliness of Maintenance and Repair Was Too Small to Reach Any Meaningful Conclusions. The CLECs point out that CGE&Y tested with sample sizes that were too small to reach any meaningful conclusions about the timeliness of maintenance and repair transactions.

144. Third, the CLECs argues that CGE&Y's findings on the quantitative evaluation portion of the Retail Parity Evaluation point towards a conclusion of disparity and Retail Parity Test conclusions should reflect this.

145. CLECs point to the findings in the RPE that there is disparity in fields and steps to complete an order and there is disparity in response times. Based on these disparities the CLECs disagree with the findings and conclusions reached by CGE&Y in the RPE. There were two IWOs involved with these findings:AZIWO1110 and AZIWO1111. CLECs disagreed with the TA closing these IWOs and took them to Impasse. The issues are as follows:

> a. Analysis of Phase 2 Retail Parity Evaluation results indicates that, for the scenarios examined during Phase 2, total IMA-GUI preorder response times experienced by CLEC representatives are consistently longer than experienced by Qwest retail representatives. On average, the total scenario response time experienced by the CLEC representative is about three times as long as that experienced by the Retail representative. The difference is substantial and highly statistically significant. It is also pervasive across nearly all scenarios examined in the Phase 2 RPE. (AZIWO1110)
>
> b CGE&Y found disparity in the numbers of fields and steps required for a CLEC using IMA-GUI to complete an order (including pre-order steps) versus Qwest; the numbers of fields and steps were greater, across most scenarios, for CLECs. (AZIWO1111)

2. <u>Qwest's Position</u>

146. Qwest pointed out that the RPE is a test unique to Arizona. No other OSS test in the country that has been approved by the FCC, including New York and Texas, has included a comparison like the RPE. Qwest also noted that this new evaluation was

intended to be conducted at a higher level than the detailed algorithmic and statistical tests that are part of the Arizona OSS test and similar tests in other jurisdictions. From its inception, stated Qwest, the RPE was intended to be an order of magnitude comparison to determine whether the necessary and acknowledged differences between Qwest's internal systems and the interfaces by which it provides CLECs access to those interfaces result in any practical difference to a customer calling in for service.

147. Qwest also argued that there are acknowledged differences between it's retail systems and the interfaces it provides to CLECs to allow them to access its OSS. Some of these acknowledged differences are necessitated because the electronic interfaces through which Qwest provides CLECs access to its OSS were designed to follow industry guidelines. The industry guidelines support wholesale ordering and are not intended to apply to retail ordering. Additionally, the CLEC interfaces were developed relatively recently with the advent of local telecommunications competition for the purpose of providing CLECs access to Qwest's current systems. In contrast, Qwest's systems were developed over a period of many years and modified as additional internal needs were identified.

148. Qwest also stressed that the overarching focus of the RPE is "on the experience which the customer has while on the line with a CLEC representative, in comparison to the experience of a customer while on the line with a Qwest representative." See MTP Section 5.2.

149. Qwest also argued that neither the MTP nor the TSD prescribed any particular analysis or methodology to be employed by CGE&Y in answering that question. Neither the MTP nor the TSD suggested any particular basis for weighing the data. Instead, CGE&Y was required to gather specified data and then exercise its professional judgment based on its personnel's years of relevant experience. Qwest stated that this is exactly what CGE&Y did.

150. Qwest dismisses AT&T's attempt to discredit CGE&Y's findings regarding the TSD's requirement for CGE&Y to count autopopulated fields on the retail and wholesale systems and compare the results. Qwest stated that CGE&Y testified that the differences in the systems precluded the apples to apples comparison envisioned by the TSD because the retail system contained certain autopopulated fields but the wholesale system used pull-down menus instead. Because the TSD directed that quantitative test measures could be used only "where apples to apples comparisons of countable data elements is possible, CGE&Y did not count the autopopulated and pull-down fields. Instead, in accordance with the TSD's requirement to use "[q]ualitative test measures....where an exact means of comparison is not possible," CGE&Y exercised its professional judgment in determining that the pull-down menus allowed creation of the resale order without re-keying the preorder data.

151. Qwest also noted that AT&T proposed in a TAG meeting immediately after the RPE workshop that five portions of the RPE should be redone. The five items related to counting steps for preorder to order integration, evaluating the relative capabilities for edit and error checking, evaluating the relative abilities to reserve large

blocks of telephone numbers, evaluating the relative abilities to check pending order status, and evaluating the relative abilities to obtain expedited due dates. Qwest stated that while these factors are listed in the TSD, neither the MTP nor the TSD prescribed any particular methodology that CGE&Y was required to employ in conducting its evaluation. During the Workshop, CGE&Y explained its findings, its interpretation of the TSD, and the approach it took in evaluating each of these test items.

152. Qwest noted that first, CGE&Y explained that steps could not be compared for preorder to order integration in the RPE because the systems are dissimilar. Second, CGE&Y explained that it did observe that relative edit and error checking capabilities were similar. Third, CGE&Y explained that the process for both wholesale and retail reservation of large blocks of telephone numbers was a manual process and evaluation of that manual process is outside of the scope of the RPE. Thus, CGE&Y evaluated the processes to the point at which each process required a manual telephone call to the same center. Fourth, CGE&Y confirmed that the functionality to inquire as to the status of pending orders existed for both wholesale and retail. However, the design of the RPE, as set forth in the MTP, specifically provided that the RPE orders were to be canceled in the service order processes. Fifth, CGE&Y ended its analysis of the relative abilities of wholesale and retail representatives to obtain expedited due dates at the point where both processes required phone calls because the RPE was not intended to follow orders to that extent.

C. Staff Discussion and Recommendations

153. CLECs contend that there is insufficient evidence to reach conclusions as to retail parity, and to the contrary, evidence shows that Qwest is not providing CLECs with nondiscriminatory access to its OSS. Staff reviewed the CLEC comments and the TA's findings on these issues in CGE&Y's Final OSS Test Report. Staff believes that the TA has addressed the CLECs' issues listed above. CLEC concerns appear to be more "disagreement with the findings and conclusions of the TA" rather than as to whether the TA completed the activities.

154. CLEC issues were brought up in a Workshop related to the initial RPE test performed by the TA. Following the Workshop, Staff observed that the TA needed to address these issues and the TA concurred that retesting should be performed for the RPE test. The Final Report reflects the results of the retest and includes findings for the issues cited above.

155. Two issues warrant further Staff comments:

a. Ability to request large blocks of telephone numbers The Report compares the ability of a CLEC to request large blocks of telephone numbers with the ability of a Qwest representative to do so. While the CLEC has the ability to reserve telephone numbers, the TA finding of "parity" is somewhat questionable. The Qwest representative gets immediate feedback, while the CLEC received a "fax response" at a later

time. Staff agrees with the CLECs that this is not a "parity response." The TA also apparently agrees because in their list of recommendations for improvements in Qwest processes, CGE&Y recommends improvement in the process of the CLEC requesting large blocks of telephone numbers. Staff agrees with this recommendation and request that Qwest change the process to one that provides parity to the CLECs.

b. The ability to expedite Due Date. The TA evaluated the CLEC and Qwest processes for requesting an expedited due date and found they were the same. However, the CLECs contend that the test should have also ascertained that the number of expedited Due Date requests for CLECs and Qwest were in parity. The TA did not evaluate this, and counters that the MTP did not require this evaluation. The Staff agrees with the TA that such an evaluation was not required. Staff's underlying considerations for not conducting a test in the manner prescribed by the CLECs are that:

- Determination of statistical parity for this process would have taken a large sample of request over an extended period.

- The Staff believes that a better method of determining whether Qwest is expediting Due Dates is through commercial data for the PID that measures installation interval (OP-4 Installation Interval).

- If Qwest expedites Due Dates for its customers and not CLECs this PID will not be in parity and a penalty under the PAP would be paid to the CLECs.

156. Second, Staff believes that CLECs arguments that CGE&Y's sample size during the evaluation of the timeliness of maintenance and repair was too small to reach any meaningful conclusions is a moot point. The testing referred to by the CLECs is the test of the IMA-GUI M&R for the Retail Parity Test. Subsequent to the completion of the test, Qwest replaced the IMA-GUI system for M&R with the Customer Electronic Maintenance and Repair (CEMR) system. The parties agreed that the CEMR system would be evaluated in the FT, which was the case. The CEMR system was designed by Qwest specifically to handle CLEC M&R and to overcome problems that existed with the old IMA-GUI M&R system. The system provides access to Qwest M&R basically in the same manner as for Qwest Retail systems and therefore is "almost parity" by design both in functionality and timeliness. Testing of CEMR in the FT confirms that this is the case.

157. Finally, M&R systems do not have the same timeliness issues that ordering systems have. This is mainly because M&R requires only a small number of transactions (i.e., there is not a PID for M&R OSS response times). This is true not only for Arizona, but industry-wide. Staff believes that because of the design of the CEMR system and the verification testing in the FT that this issue is closed.

158. Third, Staff does not believe that CGE&Y's findings on the quantitative evaluation portion of the Retail Parity Evaluation point towards a conclusion of disparity.

159. Because these IWOs were taken to Impasse, Staff considered the substance of these disagreements in detail. Staff concurred with the closing of AZIWO1110 and AZIWO1111. As a result, Staff also concurs with the TA findings and conclusions in the RPE.

a. Parity performance of these systems is not expected. Since CLEC access to the Qwest OSS systems is through the IMA system, it is understood that the IMA-GUI response times would be longer than the internal Qwest response times. Therefore a Qwest service representative would experience less delay than a CLEC representative would. The first proposed benchmarks for IMA-GUI response time were expressed as retail + "x" seconds. These benchmarks were later negotiated between the CLECs and Qwest and changed to fixed benchmarks. Other ILECs still use retail + "x" seconds response time as a standard. The IMA response time benchmark intervals are greater than the Qwest response times for its internal OSS systems. The current IMA-GUI response times as required by the PID (PO-1) for Arizona do not provide for parity performance.

b. In addition, it was also understood that the IMA-GUI interface would likely require more entries by a CLEC representative for order entry than a retail representative. This is because of Order and Billing Forum (OBF) standards requirements plus other differences between retail and wholesale operations.

160. The RPE was included in the MTP because of the differences between the CLEC systems performance and the Qwest systems performance. It was never expected that response times or order entries for IMA-GUI would be in parity with retail systems. As stated in the MTP: "Specifically, the purpose of this test is to determine whether a CLEC representative, using a Qwest OSS interface, can provide service in substantially (not identical) the same time and manner as the service that a Qwest representative provides".

a. The evaluative criteria in the RPE were not parity of system response times or order entry requirements. CGE&Y has gone far beyond the analysis that was anticipated by the MTP. It has provided detailed statistical analysis of response times. It has counted fields and steps for IMA-GUI and retail systems and compared them.

b. Following the workshop on the RPE, CGE&Y has re-tested Retail Parity to provide additional analysis. IWOs on these issues have subsequently been opened, responded to, and closed.

160. Most importantly in Staff's opinion, however, as required by the MTP, CGE&Y compared the experience of a CLEC representative using the IMA-GUI interface with a Qwest representative using Qwest's systems. They found that the CLEC representative could provide service in substantially the same time and manner as that which the Qwest representative provides. The average service order negotiation takes twenty to twenty five minutes or longer. This makes the nominal IMA-GUI system benchmark response times of only a few seconds, even though more than Qwest retail time, irrelevant. CLEC order entry requirements are substantially automated and are not significantly greater than the retail requirements. Further, CGE&Y found in the Capacity Test that the IMA-GUI response times were well within the negotiated benchmarks for PO-1. Based on the overall analysis, CGE&Y's findings are reasonable.

161. Staff concurs that, in accordance with its analysis, CGE&Y closed all RPE IWOs appropriately. Staff also believes that the CLECs are perhaps overlooking the original intent of the RPE. Parity performance of the IMA-GUI system compared to the Qwest retail system is not a requirement of the RPE. The findings of this evaluation indicate that the IMA-GUI system should adequately meet the requirements of small volume CLECs. The question of CLEC/Qwest parity is not an EDI issue.

162. Staff also supports the following recommendation of CGE&Y relative to Retail Parity:

> a. CGE&Y recommends that Qwest improve the process for CLECs to reserve large blocks of TNs. The reservation of large blocks of TNs is currently a manual process for CLECs. A process improvement, through mechanization or other means, would be most beneficial to CLECs when servicing business customers. The basis for this recommendation is discussed in the Reetail Parity Evaluation section of this report on page 236 and in Data Request 192. (Recommendation No. 9).

163. In summary, Staff agrees with the TA findings and conclusions regarding Retail Parity and recommends that the ACC support them and find Qwest to be Section 271 compliant in this regard.

3. CAPACITY TEST

a. Capacity Test Objectives and Process

164. The Capacity Test (CT) was designed to determine whether Qwest's OSS and processes for pre-order and ordering transactions could predictably handle projected loads that were equal to or greater than transactions volumes forecasted by TAG participants.[28] The CT also included reviews of procedures associated with computer system scalability and staff scalability, to determine, under a specific set of

[28] CGE&Y's discussion of the Capacity Test is contained at pps. 261 through 318 of their Final Report.

assumptions, whether or not Qwest appeared to be capable of handling both "projected" and "unexpected" future CLEC demand. The CT encompassed:

a. System capacity testing used "load generators" to verify the capacity of designated Qwest OSS.

b. OSS system scalability encompassed procedures for capacity expansion and estimates of the largest volume that the OSS configuration would accept under normal conditions.

c. Staff scalability investigated the ability of Qwest personnel staffing processes to accommodate growth rates that may be higher than anticipated.

165. The TAG Capacity Test Sub-committee made up of TAG participants including CLECs and Qwest designed the CT. The details of the OSS Capacity Test are described in the System Capacity Test Detailed Plan. The CT included tests for evaluating the capacity of Qwest's pre-order and ordering OSS interfaces for resale, number portability, UNE-P, UNE-loop, and UNE-loop with number portability. A full complement of tests was performed for each of Qwest's electronic gateways, including IMA-GUI and EDI. Orders were cancelled prior to provisioning.

166. The CT incorporated a "test deck" comprised of a representative mix of preorder queries and order transactions established by the Subcommittee.

a. For preordering, volume units were "service queries." The generated workload encompassed: address validation; CSRs; service and feature availability; appointment scheduling inquiry; facility availability; and telephone number inquiry.

b. For ordering, volume units were LSRs. A representative mix of "clean" LSRs and LSRs "seeded with errors" was used. The test validated the capacity of the systems to process typical commercial LSRs in a production environment (although not across extensive LSR types). Test conditions accommodated errors and rejections.

167. The CT determined if Qwest's systems could meet benchmark standards set for pre-order transactions (PO-1) and FOCs (PO-5) under the increased load. CGE&Y did not measure actual CLEC pre-order transactions for determining PO-1, but used Qwest simulated transaction system known as IMA Response Time Measurement (IRTM). [29] IRTM is Qwest's system for determining OSS response times.

168. The generated volumes incorporated expected demand for either Qwest's entire 14-state service area or its Central Region, as appropriate. Operational Readiness Tests (ORTs) were performed for the purpose of issuing orders that would verify flow-

[29] An integral part of the Capacity Test was to collect actual response times experienced by the Pseudo-CLEC to compare results to those reported by Qwest using IRTM.

through as anticipated. (In effect, the ORT was a "dry run" to ensure that all interconnecting systems worked prior to running the CT.) Multiple ORTs were run to resolve design discrepancies in the "test deck".

169. Throughputs of the CT were as follows:

a. Pre-order - A total of 21,500 pre-order transactions were executed and reported during the 11-hour CT, consisting of 18,316 EDI and 3,184 GUI transactions. An additional load of 14,387 pre-order transactions was executed during the four-hour Stress Test consisting of 12,053 EDI and 2,334 GUI transactions.

b. Order - A total of 4,915 LSRs were submitted for the CT, of which 4,217 were submitted through EDI and 698 through GUI. An additional 3,121 LSRs were submitted for the Stress Test, of which 2,686 were submitted through EDI and 435 through GUI.

170. "Success criteria" for the CT required that 6-month, 9-month and 12-month load forecasts meet specified benchmarks and pass a "scalability assessment. A "Stress Test," conducted for diagnostic purposes, was to ascertain that volumes at 150% of the respective peak 12-month forecasted capacity did not adversely affect Qwest's production environment.[30] Stress test volume was to increase progressively from 50 percent to 150 percent higher than the base volume, and be sustained for at least two hours.

171. Preordering and ordering components of the CT were executed independently of each other. The CT extended over an eleven-hour time frame. The stress test was performed over a four-hour period. To ensure accurate results and by agreement of the parties, the Capacity Test was not run at the same as the Functionality Test.

b. CGE&Y CT Test Results

172. The specifics of CT administration and implementation are provided in Appendix D. The CGE&Y System CT and Stress Test yielded the following results:

a. The 12-month forecasted volume for pre-order queries transmitted to Qwest's OSS were processed satisfactorily. The added test volumes, (as an overlay to the normal production activity) did not cause Qwest's OSS to experience abnormal terminations or disruption of operations.

[30] As such, PO-1 benchmarks had to be met at the 6-month level, but did not have to be met at the 9 and 12-month levels when the scalability analysis was passed. Neither benchmarks nor the scalability assessment applied to the diagnostic stress test.

b. The pre-order performance results (PO-1A for GUI and PO-1B for EDI) obtained from the 12-month CT were within the required PID benchmarks for each query type. This was true for the times reported by IRTM as well as times calculated from the test data provided by the Pseudo-CLEC.

c. The FOC performance results (PO-5A for GUI, and PO-5B for EDI) were within PID benchmarks. Accordingly, 95% of all FOCs were received within twenty minutes for both GUI and EDI for all LSR product activity types.

d. During the Stress Test the level of performance for receiving pre-order responses from Qwest's OSS met benchmarks at loads up to 150% of the peak hour load. During the third hour, the Stress Test volume reached 220% of the peak hour load (the plan was only to reach 150%) and caused the EDI pre-order process to deteriorate.

e. P0-1A results obtained during the stress test are within the PID benchmarks for all query types. This was true for the times reported by IRTM as well as times calculated from the test data provided by the Pseudo-CLEC.

f. PO-1B results obtained during the course of the stress test, as anticipated, did not meet the PID benchmarks during the third hour. During the third hour of the test, responses were delayed due to high transaction volumes. When EDI transaction intervals obtained during the third hour are excluded from the results, the resultant average response times were within the PID benchmarks and were comparable to results achieved by IRTM.

g. PO-5A and PO-5B results obtained during the stress test are within PID benchmarks for all LSR product activity types.

h. Data from the 12-month CT does not dispute that IRTM is an adequate tool for gauging pre-order response time intervals Qwest's OSS are providing to the CLECs.[31]

173. CGE&Y concluded that Qwest's OSS continued to provide a level of performance well within the benchmarks established during all phases of the System CT. The relevant performance measure standards were met. Qwest's OSS handled the offered load. CT execution did not cause application or system failures. Non flow-through orders were not processed. Therefore, CGE&Y concluded that Qwest's OSS have the capacity to meet current demand and that forecast for the forthcoming 12 months.

[31] Once a timeout exclusion was applied to EDI results from the stress test, stress test results also support this conclusion.

c. Scalability Evaluation

174. The TA also performed a system scalability analysis to determine if Qwest had suitable procedures for scaling its systems, thereby ensuring sufficient capacity to handle CLEC loads. The System Scalability Evaluation included an examination of the OSS interfaces, systems that support these interfaces, and databases that were accessed in conjunction with related OSS functions. This encompassed:

a. Procedures for tracking OSS load and capacity; procedures for forecasting future OSS loads; and the processes for accommodating OSS computer growth.

b. OSS backup, security, and disaster recovery, and measures to ensure OSS database security.

175. The TA performed "a Staff Scalability analysis" to determine if Qwest had the ability to increase the number of personnel available to perform these manual functions. This review encompassed:

a. Evaluation of force models and development procedures to evaluate CLEC support center requirements.

b. Evaluation of Qwest's volume contingency plans to meet dramatic increases in CLEC order volume.

c. Evaluation of Qwest's disaster recovery plans to assure continued operations in the event of catastrophic service disruptions.

d. Evaluation of scalability of Qwest's recruiting and training programs to ensure the availability of staff with the skills to adequately perform the manual support functions.

176. Qwest's staff planning process was assessed in terms of the number of staff, the facilities to accommodate staff, and the training necessary to bring new personnel up to appropriate levels of productivity. Qwest's "support center workforce development" modeling procedures were reviewed together with the mechanisms linking future volume projections and workforce modeling procedures. Support centers were evaluated for the ability to respond to increased workloads and to provide adequate resources to handle the manual processing of non flow-through LSRs. Contingency plans to meet unforeseen increases in order volume, and Qwest's disaster recovery plans to assure continued OSS support for CLECs were also evaluated. The ability of Qwest's recruiting and training programs to provide staff with the necessary skills to perform the manual support functions was assessed. Qualitative staff scalability analysis is provided in Exhibit 5-2. Fifteen categories were evaluated, reflecting the scope of the Staff Scalability analysis.

d. CGE&Y Scalability Results

177. The System Scalability review conducted by CGE&Y determined that Qwest's processes, procedures and planning tools currently in place adequately monitor Qwest's OSS to scale for anticipated larger workloads, specifically:

a. Procedures for tracking OSS loads and capacities are in place, actively being utilized, and sufficient to detect unexpected increases in volume in order to react appropriately.

b. Procedures for forecasting future OSS loads are similar to procedures observed in other jurisdictions for planning purposes and are adequately maintained and followed by Qwest's systems staff.

c. Processes are in place and actively followed for managing and providing the necessary CPU, memory and data storage requirements for Qwest's OSS computer growth.

d. Qwest has adequate procedures in place to enable its staff in executing OSS interface data security processes.

178. A more detailed summary of CGE&Y's System scalability findings are summarized in Exhibit 5-1. The extensive scope of analysis is reflected in approximately 30 categories of measurements addressed.

179. In light of the above findings, CGE&Y concluded that Qwest has adequate processes and procedures in place to maintain system capacity; that these processes and procedures are well documented; that these processes and procedures are sufficient to meet required performance levels that have been established thereby providing a meaningful opportunity for an efficient CLEC to compete.

180. CGE&Y also determined that Qwest has ability to increase personnel to process CLEC orders. In this regard, CGE&Y found:

a. CLEC support center workforce development modeling procedures and documentation are available.

b. In-place volume contingency plans to meet dramatic increases in CLEC order volumes through either re-routing work to supporting ISC offices, or outsourcing to a vendor, are documented and available to Qwest staff. Provisions are sufficient to cover the daily workload.

c. Disaster recovery plans are well defined and assure that operations will be continued and sustained in the case of mishap.

d. Recruiting and training programs ensure the continued availability of competent staff with the necessary skills to adequately process CLEC orders.

181. Based on the above findings, CGE&Y concluded that Qwest maintains adequate forecasting procedures to identify the need for additional work forces; to respond within reasonable timeframe; and to make provisions for appropriate training and placement.

e. Position of the Parties

1. CLEC's Position

182. CLECs take issue with the TA's findings as to the CT. CLECs contend Operational Readiness Test ("ORT") results were not properly tracked; analysis demonstrated that Qwest's calculation of PO-1 results is non-compliant with the PO-1 PID; stress volumes yielded excessive response times for CLECs; and the CT failed to evaluate actual CLEC usage of Qwest's preordering system against results produced by Qwest's IRTM "system simulator." These issues are discussed below:

183. CLECs assert that the results of the ORT should have been compared with the results of the "System" CT, which would demonstrate consistency of results between the separate tests as "a logical application of test integrity."

184. First, the CLECs raised the following specific issues relative to the ORT conducted by CGE&Y prior to start of the CT:

a. CLECs contend that CGE&Y did not properly track ORT results. CLECs observe that issues identified in section 4.1.3 of CGE&Y's interim Final Report "included incorrect test scripts created by CGE&Y, incorrect templates created by the Pseudo-CLEC, incorrect test bed setup by Qwest, and inconsistent reporting of response times."

b. CLECs assert that "without tracking the results of these issues for each ORT, CGE&Y ignored the terms of the Detail (CT) Plan and could not properly validate that any of these issues were, in fact, resolved." CLECs point to the observation that the Pseudo-CLEC enjoyed significantly faster query response time and significantly shortened FOC intervals during the CT than were experienced in the ORT.

185. Second, the CLECs also raised several issues related to Qwest's use of IMA Response Time Measurement (IRTM) system to measure OSS response times, per the PO-1 PID. PO-1 measures the timeliness of responses to specific preordering/ordering queries for CLECs via specified gateway interfaces. Measurements are made using the Qwest IRTM system that simulates transactions of requesting preordering/ordering information from the underlying OSS. When PID and performance standards were established, CLECs conditionally accepted the use of IRTM to measure OSS response times. Parties agreed that the results of the OSS test would provide a basis

for ascertaining whether Pseudo-CLEC's "actual results" of pre-order queries were consistent with "IRTM results." However, after reviewing CT and FT results, the CLECs contended that IRTM results for EDI transactions were not sufficiently accurate. CLECs claim analysis involving the IRTM demonstrated that Qwest's calculation of PO-1 results is non-compliant with the PO-1 PID.[32] CLECs had issues with comparison of measured results with IRTM results. CLECs argue that actual measured EDI transactions are more accurate than IRTM for measuring OSS response times.

186. The CLECs propose that, to overcome their concerns, Qwest be required to use actual measured EDI response times as source data for determining PO-1B results.

2. Qwest's Position

187. Qwest first noted that in the first phase of this test, CGE&Y instructed the Pseudo-CLEC to submit pre-ordering and ordering transactions to Qwest's OSS in the volumes that were expected to occur twelve months in the future. The success criteria for this test required Qwest to meet certain performance metrics at volumes projected to occur six months from the date the test was run. For volumes projected to occur nine and twelve months from the date of the CT, Qwest could pass even if it did not meet those performance metrics so as long as CGE&Y determined that Qwest's procedures for scaling up its systems and staff were capable of handling projected future volumes. Thus, meeting performance benchmarks was an absolute requirements only at the sixth month level. In the second phase of the CT, CGE&Y instructed the Pseudo-CLEC to submit pre-ordering and ordering transaction to Qwest's OSS in increasing increments up to 150% of the volume projected for the busiest hour twelve months in the future. There were no success criteria for the Stress Test.

188. Qwest stated that it passed both phases of the CT. Qwest further stated that it met the benchmarks in the twelve month test despite the fact that CGE&Y actually submitted more transactions than were planned. Qwest also stated that it met the benchmarks during the Stress Test except for a sixteen minute period during which CGE&Y bombarded Qwest's OSS with a full 70% more pre-order transactions than planned – a colossal 220% of the volume that was not expected to materialize for a full year into the future. Qwest also stated that it passed the systems and staff scalability tests.

189. In responding to the CLEC concerns, Qwest first notes that the TSD does not require TAG approval of the Detailed Capacity Test Plan, which was the subject of discussion and collaboration over the course of approximately thirty meetings beginning in April 2000 and continuing through July 2001 by the Capacity Subcommittee. Qwest

[32] PO-1A and PO-1B measures the time interval between query and response for specified pre-order/order transactions through the electronic interface. These measures are comprised of 10 transaction types that are accordingly measured and reported on a disaggregated basis. The "standards of performance" are benchmark measures that reflect the amount of time that it takes Qwest's systems to process the CLEC query and provide a response. Separate reporting is provided for queries submitted via IMA GUI and via IMA-EDI.

states that the requirement that the plan be reviewed with the CLECs, the Pseudo-CLEC and Qwest prior to conducting the CT was met because all versions of the Detailed Test Plan were reviewed by the CLECs, the Pseudo-CLEC, and Qwest and they all actually discussed and developed the Detailed Test Plan.

190. Qwest also argued that when properly analyzed, the ORT results are consistent with the twelve month test results. Qwest pointed out that the purpose of the ORT was different than the purpose of the CT. The CT's primary purpose was to validate the capacity of Qwest's OSS to process typical commercial LSRs, not to evaluate the functionality across extensive LSR types. While the ORT was not required by either the MTP or TSD, the Capacity Subcommittee determined that operational readiness testing was appropriate for the CT in order to verify that all of the components for the test, were in place and working sufficiently to enable the test to proceed. In particular, the ORTs were designed to eliminate test account and script errors. Qwest stated that the ORTs were very valuable because they ensured that the test accounts were properly established so that the planned volumes could be achieved. While CGE&Y had planned to conduct three ORTs, it actually conducted five to attain the desired results. The ORTs allowed errors to be identified and fixed.

191. Qwest dismissed AT&T's comparison of the results of the ORT and 12 month CT. Qwest also pointed out that the differences were largely attributable to a significant number of unusually long response times during the ORT. Because there were relatively fewer transactions in the ORT, the results were skewed by the number of unusually long response times, brought about by issues relating to test accounts. Qwest also pointed out that in accordance with the MTP mandate to primarily use error-free transactions in the CT, the test account information used for the pre-order transactions was fine-tuned over the course of the ORTs to reduce the number of long response times due to test account information errors. Thus, there were fewer test account errors submitted during the 12 month test and more iterations of error-free test account information to attain the necessary volumes.

192. Qwest also challenged AT&T's claim that the FOC intervals for the 12 month test and ORT showed discrepancies. Qwest pointed out that a review of the transaction reports CGE&Y produced from the 12 month test and the ORT revealed that CGE&Y calculated FOC intervals differently in each case. If the FOC intervals from the ORT are calculated using the same methodology CGE&Y used for the 12 month test, Qwest stated that the results are much more comparable.

193. Qwest also supported CGE&Y's conclusion that IRTM is an adequate toll for gauging pre-order response times. Qwest stated that the CLEC's claim that IRTM does not reflect the CLECs' experience is based upon a faulty premise. Qwest that while it is possible under extremely limited circumstances for Qwest's systems to provide a valid response that exceeds 200 seconds, Qwest excludes response times that exceed 200 seconds from its results for reporting purposes in accordance with the PIDs. Qwest stated that the circumstances under which a CLEC can experience response times in excess of 200 seconds are rare and, in any event, the issue does not relate to any legitimate CT

issue or to IRTM's ability to capture these longer response times. Under normal conditions, if a CLEC does not receive a response to a pre-order query within 200 seconds, the time out mechanism will terminate the transaction. However, the PID provides that timed out transactions are excluded from reported results. Thus, even though IRTM records all response times, regardless of length, Qwest excludes IRTM results that exceed 200 seconds from its PID calculations because the business process layer mechanism times out transactions that exceed 200 seconds. However, during the CT, because the transaction were queued for a period of time before they entered the business process layer, the processing time for a transaction once it entered the business process layer may be less than 200 seconds and the transaction was not timed out. Qwest states that this issue bears no relationship to the adequacy of IRTM as a measurement tool.

194. Qwest also responded to CLEC concerns regarding the IRTM outage. During the third hour of the Stress Test, IRTM experienced an outage that prevented it from recording response times. CGE&Y issued IWO2119 and, in response, Qwest explained that the outage was coincidental and unrelated to the Stress Test. At the workshop, AT&T claimed that the outage called into question IRTM's adequacy as a measurement tool. Qwest claimed that there was no relation between the outage and Stress Test volumes. Given the configuration of IRTM it is not possible for IRTM to be impacted by the volumes of transactions processed by Qwest's interfaces, just as a CLEC's systems are not impacted by the volumes of transactions processed by Qwest's interfaces.

195. Qwest also dismissed the CLECs claim that the IRTM outage somehow impacted the quality of the data comparison CGE&Y performed. The IRTM outage occurred during the third hour of the Stress Test, when the Pseudo-CLEC received the longest response times. The longer response times were caused by the enormous transaction volumes required for the Stress Test, which were submitted by the Pseudo-CLEC in bursts. These enormous, bursty volumes from a single CLEC would not occur in Qwest's production environment because no single CLEC would be generating volumes at the level projected for the entire community, as the Pseudo-CLEC did for purpose of the Stress Test. Thus, the period for which IRTM data is not available is not representative of any realistic CLEC experience. Qwest also pointed that even during the period for which IRTM was not available, CGE&Y continued to successfully collect the necessary data regarding the response times received by the Pseudo-CLEC.

196. Finally, Qwest responded to CLEC concerns regarding a Fetch-n-Stuff configuration change Qwest had made. Seventy-nine orders (representing only 1.6%) of all LSRs processed during the test, that were expected to receive a FOC did not receive a FOC because of a problem with Fetch-n-Stuff. CGE&Y issued IWO1143 and Qwest described the change it made in its response. CGE&Y adequately explained that a flow-through eligible order may fall to manual handling for many reasons; so long as one of those reasons caused the fall out, the mer fact that orders fell out for manual handling does not indicate that there was a systematic software or configuration problem. This particular change related to a tuning change in the UNIX operating system that did not

constitute a software error. CGE&Y monitored the retesting efforts in the FT and determined that the issued has not recurred. Qwest argued further that even if the Fetch-n-Stuff problem had not been fixed, the fall out of 80 orders does not indicate a CT volume-related problem because Qwest's ISC can easily process 80 orders that have fallen out for manual handling with existing resources.

f. Staff Discussion and Recommendation

197. Staff agrees with CGE&Y's findings and conclusions regarding the Capacity Test and System and Staff Scalability Tests.

198. First, Staff disagrees with CLECs' suggested interpretation of the ORT. According to the System Capacity Test Detailed Plan, the primary purposes of the ORT were to:

a. Ensure that implementing the CT would not adversely affect Qwest's production environment.

b. Ensure that the "test bed" of test accounts to be submitted during the System CT were all capable of being processed by Qwest without "falling out" for manual handling.

199. Both of these requirements were fulfilled as a prerequisite for the test.

200. In Staff's opinion, the CLECs are misconstruing the ORT. The purpose of the ORT was to "set up" the test -- and in due course to monitor the activities of the Pseudo-CLEC to ensure successful test completion. There was never an intention to track results, nor was there a defined need. The CLEC criticism of not tracking the ORT is offered in hindsight. Agreement was reached as to CT procedures without any mention of tracking ORT results.

201. The CLECs imply from their comparative analysis between the ORT and the CT that Qwest must have changed their "system" so that they could pass the CT. Staff disagrees with the CLECs' implication. For many reasons provided by the TA, the comparison of ORT results and CT results are invalid. Further, in the CT workshop, Qwest advised that it had not made any system changes between the ORT and the CT. Finally, the results of the CT clearly demonstrate that Qwest systems can accommodate significantly higher CLEC transaction volumes than the current level of CLEC transactions.

202. Second, with regard to the CLEC's arguments regarding excessive response times - Staff concurs with the way CGE&Y handled the time-out issue related to the Stress Test. This test was not to be used for evaluating response time performance of Qwest's systems.

203. Using "actual measured results" compared to IRTM - The CLECs went to Impasse for Staff resolution. Because of this, the Staff reviewed this issue in detail. Staff has concurred with CGE&Y's finding that IRTM provided a good representation of CLEC OSS pre-order response times. However, Staff also concluded that because of CLEC concerns, Qwest should be required to undertake the necessary development to directly measure EDI response times at the Interactive Agent (IA), Qwest's IMA entry point. Once implemented, Qwest would be required to track EDI response times measured at the IA. For purposes of PID calculations, in the interim Qwest would continue to use IRTM, with a decision to be made at 12 and 18 month reviews as to whether to use EDI response times as measured at the Qwest IA or to continue to use IRTM.[33]

204. Staff has reviewed the results of CGE&Y's Capacity Test, the Stress Test and System and Staff Scalability analysis.

205. Staff concurs that Qwest's OSS and interfaces have the capacity to meet current and forecast demand. Staff also concurs that they performed satisfactorily under the increased "stress" load. Systems and Staff scalability processes are in place, they are being utilized, and are sufficient to detect abnormal volume increases and react appropriately. Further, with Staff' resolution of the IRTM impasse issue, most of the CLEC's concerns are resolved. Staff recommends that the Commission find that Qwest meets § 271 requirements with respect to capacity.

4. RELATIONSHIP MANAGEMENT EVALUATION

a. Relationship Management Objectives and Process

206. The Relationship Management Evaluation (RME) was a "process assessment" that focused on operations support-related methods and procedures that Qwest uses in interacting with CLECs.[34] This included Qwest's programs for providing systems information, training, and problem identification and resolution.

207. The RME sought to determine whether or not Qwest's CLEC account establishment, account management, training, interface development, and CMP[35] were appropriately conducted and effectively communicated to CLECs. The RME also was designed to determine the extent to which Qwest's systems and/or process change-control methods were appropriately handled and effectively communicated to CLECs in accordance with defined change-control procedures.

208. The RME encompassed examination of documentation, specifications and consultative assistance provided by Qwest to facilitate CLECs development of an EDI interface or installation of an IMA-GUI interface. This included the test

---

[33] This may ultimately be adjudicated in conjunction with Qwest's 14 State forum

[34] CGE&Y's discussion of the Relationship Management Test appears at pps. 319 through 434 of their Final Report

[35] CMP is discussed in detail in Section 7.0 of this report

environment Qwest makes available to CLECs for pre-testing and qualification of EDI and EB-TA interfaces. Inputs and feedback from Qwest, the CLECs, and the Pseudo-CLEC were considered. The interface development evaluation is addressed in Appendix E.

209. RME processes are enumerated in Exhibit 6-1. They reflect the rolls of Qwest organizations that interface with the CLECs including establishment of a CLEC through startup and operation performed by HP as the Pseudo-CLEC. The four comprehensive processes associated with the business relationships between Qwest and the CLEC communities were explored. These encompassed Account Establishment, Account Management, Forecasting and Training.

1. CLEC Account Establishment

210. This encompasses the process by which a CLEC becomes certified to do business in Qwest's service territory, interconnects its network with Qwest's, and establishes systems and processes to order various Qwest products. The evaluation examined:

- Methods and procedures provided by Qwest for establishing a new CLEC customer account as a Qwest "wholesale" customer.
- Documentation available to a CLEC start-up, and consultative assistance that Qwest provided to a CLEC in getting needed documentation, including material accessible to CLECs via its website, hard copy, public documents obtainable through the State Commission, etc.
- Qwest's CLEC Account Management organization role in account establishment, including its processes, procedures, and personnel.
- CLECs' experiences with the Account Management organization as to account establishment.

211. The substance of information contained in the documentation reviewed and the clarity of instructions for completing necessary paperwork were assessed. Qualitative findings related to Account Establishment are provided in Exhibit 6-2. Twenty-eight evaluative criteria were explored, which in all cases were deemed satisfactory pursuant to closeout of IWOs generated during the course of the RME, as shown on the Exhibit.

2. CLEC Account Management

212. This encompasses methods, procedures and account management functions provided by Qwest for managing its ongoing business relationship with the CLECs. The RME examined responses to account inquiries; Help Desk call processing,

call closures, and status tracking, problem escalation, forecasting, and communications, including:

- Timeliness, accuracy, and completeness of Qwest responses to account inquiries; frequency and appropriateness of problem escalation efforts taken in response to CLEC inquiries; communications avenues that Qwest makes available to CLECs, and the extent that these are effective.

- Timeliness and responsiveness of Help Desk call processing; appropriateness and methods applied to Help Desk call closures.

213. Day-to-day account management activities from Qwest's perspective entail:

- Advising CLECs about new products as they become available; proactively selling services to the CLECs.

- Fielding questions and addressing "what if" scenarios regarding products, combinations of products, and ordering arrangements; fielding miscellaneous questions from small and medium-sized CLECs.

- Handling CLEC problem escalation, coordinating resolution of disputes, and expediting closure of M&R trouble tickets.[36]

214. Qualitative information was gathered through questionnaires and interviews with CLEC and Pseudo-CLEC personnel, as recipients of account management services, and Qwest account management staff, as service providers.

215. The Pseudo-CLEC held meetings with Qwest's Account Manager on an almost weekly basis to resolve questions/issues uncovered in the CLEC Process. The Pseudo-CLEC covered over 100 action items with the Account Manager. The meetings were useful in answering the questions and further defining the processes required by HPC to complete its tasks. From February 2000 through the end of December 2000, over 100 action items/issues were tracked with the Account Manager, as enumerated in Exhibit 6-3. This list reflects the myriad inquiries and interactions between the Pseudo-CLEC and Qwest's account management team.

3. CLEC Forecasts

216. Account management is responsible for assuring that CLEC facility, products, and colocation space requirements are fulfilled. Qwest account managers and

[36] Published escalation procedures are available on Qwest's wholesale website. Smaller CLECs often prefer to go through the Qwest Account Manager for escalations.

network capacity planners, together with CLEC spokespersons participate in joint demand-forecasting planning sessions. Forecasting requirements coordinated through the Account Manager are highlighted in the Exhibit 6-4. Forecasting arrangements were negotiated in other forums and are codified in the SGAT. Of concern to the CLECs is the reasonableness of Qwest's forecasting requests and Qwest's application of CLEC forecast information in its various planning activities.

4. CLEC Training

217. Training evaluation encompassed the availability of training schedules to the CLECs, the frequency of training on the various topics for which training was offered, the detail of the training curriculum and the effectiveness of the training content. Training documentation available to the CLECs was also evaluated.

218. Qwest training available to CLECs at the outset of the RME was limited to two classes (IMA and Directory Listings). During the RME, Qwest rolled out a new, vastly improved and expanded CLEC training program. An excerpt from the catalog of courses addressing CLEC training needs in systems, products and processes is provided in Exhibit 6-5, which demonstrates the scale and scope of Qwest's revised training program.

219. The courses were developed with extensive input from Qwest's product specialists and reflected CLEC feedback provided through the CLEC Account Management staff. Reaction to Qwest's new classes was found to be positive, and respondents were pleased with the quantity and variety of Qwest's new courses. Instructors were knowledgeable and answered questions to the best of their ability. These courses are still in their formative stages, and with student feedback it is expected that these courses will be streamlined and increasingly refined over time.[37]

220. Qwest's new CLEC training curriculum addresses the objectives set forth in the MTP and TSD and now accommodates the needs of the CLEC community. Results of Qwest's training program evaluation, underlying this point of view are further detailed in Exhibit 6-6. More than a dozen evaluative criteria were explored, and were deemed satisfactory in all cases.

b. Position of the Parties

1. Position of the CLECs

221. First, the CLECs argue that CGE&Y failure to perform formal interviews with CLECs in compliance with TSD requirements rendered CGE&Y's findings suspect with respect to Account Establishment, Account Maintenance, and EDI development. -- CLECs argue that the TA was remiss in not being more aggressive in interviewing

[37] Suggested refinements include preparation of orientation background material to increase student familiarity with subject area; more interactive training; more formalized record-keeping to enrich agenda in future classes; and increased simulation of production environment.

CLECs. They charge that CGE&Y unilaterally decided that "questionnaires were an acceptable substitute for interviews with the CLECs."

222. Second, the CLECs allege that CGE&Y failed to evaluate "internal documentation" of Qwest process and procedures to verify that its relationship activities with CLECs are consistently and reliably performed. -- CLECs argue that "The ACC needs to have answers to questions regarding the evaluation of Qwest's internal practices and procedures to determine whether the practices and procedures will be sustained when competitors interact with Qwest to establish CLEC accounts, manage CLEC accounts, and provision services to CLECs for their end users." Furthermore, CLECs contend that such process and procedure issues are raised in the TSD as requirements that CGE&Y has ignored.

223. Third, the CLECs argues that CGE&Y failed to provide conclusions that are required by the MTP and the TSD as to the adequacy of preordering, ordering, repair and maintenance, and billing interfaces, and Qwest's Account Management process. CLECs cite a litany of purported shortcomings as to CGE&Y's failure to fulfill requirements of the MTP and TSD. These include:

a. Failure to analyze HP's EB-TA and Billing Supplement Reports.

b. Failure to complete analysis of interfaces that were subject to the interface development evaluation.

c. Failure to reach a firm conclusion on Qwest's Account Management process.

d. Failure to highlight a lack of responsiveness from Qwest's Help Desks.

2. <u>Qwest's Position</u>

224. First, in response to the CLEC's concern that CGE&Y did not conduct many formal interviews, Qwest states that CGE&Y's use of written questionnaires to solicit CLEC input is consistent with the MTP's mandate to document the CLECs' experiences. In some cases, Qwest stated that these questionnaires took the place of in-person interviews. CGE&Y diligently followed up with CLECs to encourage them to respond to these questionnaires. CGE&Y sent two rounds of follow up e-mails encouraging CLECs to respond to the questionnaires. Both CGE&Y and Staff proactively contacted CLECs to encourage them to provide input. In addition, any CLEC was invited to call CGE&Y and provide comment. CGE&Y also contacted CLECs throughout the test to conduct informal interviews. CGE&Y also conferred with CLECs to clarify specific answers on specific questionnaires. CLECs also oftentimes approached CGE&Y to discuss specific issues. Some of the information provided by CLECs pursuant to these offers resulted in the issuance of IWOs.

225. Second, regarding the need to review Qwest's internal processes, Qwest states that the MTP describes the documentation to be reviewed and evaluated in precisely the same way every time: documentation to be retrieved from Qwest's web site or otherwise provided by Qwest. Qwest stated that these provisions leave no question that the documentation CGE&Y was tasked with reviewing was the external documentation Qwest provides to CLECs. Qwest also pointed out that CGE&Y went beyond this and through data requests, CGE&Y also obtained and reviewed specific information regarding Qwest's internal processes, procedures, or flowcharts during the course of performing root cause analysis in processing IWOs.

226. Third, in response to concerns by CLECs as to CGE&Y's evaluation of Qwest's CLEC training, Qwest relied upon a quote by WorldCom: "Qwest's CLEC training efforts progressed from unsatisfactory to satisfactory' during the course of the RME." Qwest further stated that CGE&Y's findings reflected the tremendous progress Qwest has made in improving its CLEC training program. CGE&Y evaluated both the old Qwest training programs and the new ones. CGE&Y reviewed completed course assessment sheets which reflected positive feedback.

227. Fourth, regarding CLEC concerns regarding the Pseudo-CLEC's experiences with Qwest's help desk, documented in IWO1145-1, Qwest stated that of the 549 calls referenced, only 82 were escalated. Based on the data provided by the Pseudo-CLEC in its Help Desk Report, many of these calls involved standard issues that would have been resolved immediately. Assuming that as many as half of these calls involved issues that required more than two hours to resolve, the information in the IWO is consistent with Qwest's commercial data that indicate that Qwest meets its two hour commitment approximately 92% of the time. Further Qwest noted that CGE&Y agreed to review four additional months of raw data reflecting the CLECs' actual commercial experience to allow CGE&Y to independently verify the Help Desk's performance. Additionally, with regard to the Help Desk training deficiencies raised in IWO1146, the TAG determined that this would be retested.

C. Staff Discussion and Recommendation

228. With regard to the CLEC's claim that CGE&Y failed to perform formal interviews with CLECs in compliance with TSD requirements rendered CGE&Y's findings suspect with respect to Account Establishment, Account Maintenance, and EDI development, Staff concludes that the CLECs input was sufficient for the findings of the RME. Staff does not agree that findings would be changed as a result of additional interviews. First, the purpose of establishing a Pseudo-CLEC was to "live the experience" of a CLEC starting up and doing business in Arizona. This effort alone provided the TA factual information for the RME. The Pseudo-CLEC provided written reports on its experience and was interviewed by the TA.

a. In addition, CLECs were active participants in the test from the beginning and had every opportunity to communicate with the TA any concern they had. The CLECs took advantage of this opportunity.

b. Finally, the TA did conduct some formal interviews. They also attended CMP meetings on many occasions, during which CLECs had access to the TA. Staff is also aware of visits to CLECs (Cox and Covad) to review operational concerns that were not reported in the Final Report as formal interviews.

229. Second, as to the CLEC's claim that CGE&Y failed to evaluate "internal documentation" of Qwest process and procedures to verify that its relationship activities with CLECs are consistently and reliably performed. Staff concludes that the CLECs input was sufficient for the findings of the RME. Staff does not agree that findings would be changed as a result of additional interviews.

231. Third, with respect to the need to review Qwest's internal documentation there is obvious disagreement between the CLECs and the TA on the MTP and TSD requirements for process reviews. CGE&Y's position is that it interpreted "process documentation" that is found on Qwest's Web Site [38] as being related to the interaction between a CLEC and the Qwest Help Desk CGE&Y states that Qwest's internal methods and procedures were reviewed as part of other phases of the OSS Test. The RME examined directly utilized methods and procedures, and relied on other OSS Tests for other internal documentation reviews.

232. Staff is of the opinion that much of the criticisms of the CLEC's that may have been justified at the time of the workshops and, to a lesser extent, even in the draft Final Report -- has now been corrected as a result of subsequent work and retesting performed by CGE&Y and this is reflected in its Final Report

233. A series of IWOs were generated to address these and related issues. During the course of the OSS Test all of these IWOs were closed out, and issues were accordingly resolved.[39] The Relationship Management arrangement that has resulted from these efforts now fulfills the objectives of the TSD.

234. In Staff's opinion Qwest's Relationship Management process reflects extensive redesigns, improvements, and refinements that were incorporated during the course of the OSS Test. Many of the criticisms directed at Qwest by the CLECs during the course of the data gathering and workshop phases have been "overtaken by events," and are no longer apropos. In fact, the feedback and observations offered by the CLECs and Pseudo-CLEC were the drivers for constructive change.

235. Virtually every aspect of Qwest's relationship with CLECs has been scrutinized during the past two years. Where training was, in Staff's opinion, minimal at the outset of the OSS Test, Qwest now provides comprehensive training on how to order Qwest's products and use Qwest's systems. Whereas Qwest's Help Desk was deemed unresponsive at the outset of the OSS Test, service managers, and all staff are now

---

[38] TR 261-262 (Oct. 10, 2001).

[39] A total of 45 IWOs were addressed in the RME.

effectively interacting with the CLECs. During the course of the RME, many problems were found; numerous improvements were put in place as a result; and Qwest's systems, processes and procedures for working with CLECs have been greatly improved. Whereas Qwest's web-site documentation for CLECs was often fragmented or incomplete when the OSS Test began, Qwest has completely revamped its web-site documentation. As a result of the above changes, CGE&Y concluded in its Final Report that Qwest provides adequate service to the CLECs and manages relations with CLECs appropriately.

236. CGE&Y made the following recommendations relative to the Relationship Management Evaluation which Staff recommends the Commission adopt:

> a. Qwest should develop a process to seek and receive approval from a CLEC before performing any changes to a CLEC-owned account. Currently, Qwest initiated activities are shown as "Completions" on a Loss and Completion Report, but little detail is provided, causing undue confusion. Implementation of this recommendation may provide an opportunity for Qwest to improve the quality and value of the Loss and Completion Report that Qwest provides to CLECs. Notification to a CLEC indicating that Qwest-initiated changes have been made would potentially facilitate the reconciliation of the Loss and Completion Report. This recommendation was developed to address the issue of late notification of order completion on the Loss and Completion Report, and is discussed further in AZIWO2115. This issue is an appropriate candidate for review by the CMP. (Recommendation No. 2).
>
> b. CGE&Y recommends that when Qwest introduces a new product or service that could impact a CLEC account, that the appropriate OSS and process changes are communicated to the appropriate Qwest departments or workcenters. This recommendation suggests that Qwest implement process improvements that would result in a more efficient update of system tables and better communication to work centers which would help ensure efficient processing of CLEC orders. This issue is discussed in AZIWO1134, which allows CLECs to take advantage of new and revised product offerings more expeditiously. It is also discussed in AZIWo1127, which refers to software changes that were outside of a scheduled IMA release that were not communicated to the CLECs. (Recommendation No. 4).
>
> c. CGE&Y recommends that Qwest provide CLECs a 45-calendar day advance notice of final EDI design documentation. This recommendation simply suggets that Qwest conform to the timelines for issuance of EDI design documents, as presented by the CMP Redesign Team. The basis for this recommendation can be found in the Relationship Management Evaluation section of this [CGE&Y's] report on page 395, as well as in the CGE&Y report Qwest Change Management

Process Redesign Evaluation, Version 3.0, page 43. (Recommendation No. 7).

237. Staff recommends that the Commission find that Qwest meets § 271 requirements with respect to Relationship Management, and adopt the recommendations by CGE&Y set forth above.

7. PERFORMANCE MEASUREMENT EVALUATION

a. Audit Objectives and Process

238. Data accuracy assurance was a primary OSS Test objective. This objective was accomplished through a three-stage process—Performance Measurement Audit (PMA), Functionality Data Reconciliation (DR), and Functionality Test Results Comparison (FTRC). This three stage process represents a complete cradle to grave review and validation of Qwest's performance measurement data collection and processing.

- Performance Measurement Audit (PMA) – The first stage of the process was the PMA. The OSS Test program commenced only after conduct of an extensive audit of Qwest's performance measurement reporting process. All measures, and virtually every sub-measure and level of disaggregation was ultimately audited. A Functionality Test (FT) "entrance criterion" was that the performance measurements identified in Appendix C of the Master Test Plan (MTP) termed Functionality Test Measures (FTMs), had to successfully "pass" the PMA. Included in the PMA was also a validation of Qwest input data where possible. This validation consisted of on-site visits to locations where data were processed for input into Qwest systems. An overview of the PMA and data reconciliation process is provided in Appendix F.

- Data Reconciliation Report for Functionality Test Results-- - The second stage of the data reconciliation effort evaluated the extent to which the data captured in Qwest's ad hoc data files, and used to calculate §271 performance measurement results, accurately reflected the test transactions executed and the performance observed by the Pseudo-CLEC. The derivation of Qwest's ad hoc data files from Qwest's detail data files was previously validated in the PMA. The data reconciliation effort differs from the PMA in that it focused on evaluating the extent to which all transactions, as recordable by a CLEC would be represented in Qwest's source performance measurement data, and vice versa.

- Functionality Test Results Comparison Report-- The data reconciliation process did not validate all the Qwest ad hoc data elements that are used to calculate §271 performance measurement results. The Functionality Test Results Comparison completed the third stage of the data validation

process. For each performance measurement in Appendix C of the MTP, CGE&Y calculated results for a corresponding aggregated measure using data elements available in the Pseudo-CLEC data. CGE&Y compared these results to results calculated using Qwest ad hoc data for similarly aggregated measures. The results comparison showed that in most cases, there was a high level of agreement between results calculated from Qwest ad hoc and Pseudo-CLEC data.

239. Qwest and CLECs in Arizona, under the guidance of the ACC, established a set of performance measures to adequately assess Qwest's performance in meeting non-discriminatory access requirements of the 1996 Act. PMA "Test Scenarios" and associated performance measures that were audited are provided in Exhibit 9-1.[40] These measures were contained in the Arizona Performance Indicator Definitions (PID) 5.1, which was in effect at the start of the PMA process.

240. Prior to the PMA, Qwest was utilizing various automated and manual systems for gathering, summarizing and reporting PIDs. Performance measurement "source transactions" were reviewed and validated by the TA to assure that they adhered to business rules developed by Qwest, and were properly recorded in Qwest's OSS. During the course of the PMA, Qwest implemented a web site and posted PID results (beginning with December 2000 data).

241. The TA analyzed at least three months of data for all PIDs, and in some instances six months of data were analyzed. The PMA validated by all aspects of Qwest's performance measurement processes, procedures, documentation, data collection processes, business rules exclusions, calculation methods, and provided a qualitative assessment of performance measurement operations. The TA also examined Qwest's compliance with requirements of the Arizona PIDs for providing performance measurement information to CLECs within Arizona.

242. During the course of the PMA, the TAG developed, revised and approved the Arizona PIDs per PMA requirements. The PIDs underwent numerous enhancements during the course of the PMA that involved incorporation of new measures, deletion of obsolete measures and modification of existing measures in response to issues identified during the course of audit.

b. <u>Audit Results</u>

243. The PIDs included forty-six performance measurements (two of which were then under revision) with approximately 700 "sub-measures" of disaggregation. The PMA assessed the accuracy, quality, consistency and reliability of Qwest's data and Qwest's general compliance in gathering data, calculating results and reporting on these agreed to measures at every disaggregation level.

---

[40] PID, version 5.1 (PID 5.1) dated August 28, 2000 was in effect at the beginning of the audit. Version 6.3, dated May 2, 2001, was accepted by the parties and in effect at the conclusion of the audit.

244. IWOs were generated when problems or potential improvements of OSS performance measurements were identified. A total of 128 IWOs were created during the course of the audit. These were cross-referenced and classified by the type of performance measurement. Two IWOs had a potential Level 3 impact; 75 IWOs had a potential Level 2 impact, and the remaining 51 IWO had Level 1 impact.[41]

245. The breakdown of improvements to the Arizona PID is as follows:

a. 30 IWOs addressed the need for clearer documentation or actual PM improvements.

b. 38 IWOs resulted in improvements to the code Qwest utilized in producing performance measurement results.

c. 20 IWOs resulted in revisions or updates to Qwest's process documentation to reflect actual processes used to produce the measurement results in order to comply with the requirements of the current PID.

d. 8 IWOs resulted in process improvements.

e. 8 IWO achieved reconciliation of Qwest's raw data.

f. 7 IWOs resulted in mechanization of Performance Measures previously provided through manual methods, thereby eliminating potential for human error.

g. 4 IWOs contributed to reporting process improvements.

h. 1 IWO involved improved change control methodology.

i. 1 IWO resulted in a system improvement.

246. Collectively, resolution of these problems during the course of the PMA enhanced the integrity of the PIDs, and rationalized performance measurements with the requirements for PID determination.

---

[41] "Level 3" represents an incident that negatively affected CGE&Y's finding regarding whether Qwest had passed part or the entire test. "Level 1" represents the lowest level of severity. All IWOs assigned this level were considered observations that did not affect the successful outcome of a test step or the completion of a test script.

d. PID Data Element Summary Report

247. In addition to the PMA, the TSD required independent verification of Functionality Test Measurements (FTMs) utilizing data captured by the Pseudo-CLEC during the FT. This analysis, however, as described in the TSD, could not be performed. Many of the data elements required for this analysis are not furnished to CLECs. Therefore, an analysis was performed to apprise CLECs as to what data used by Qwest in its PID calculations were not reported or available to the Pseudo-CLEC so that calculations of FTM results could be calculated directly from Pseudo-CLEC data. Details concerning the source of data elements required to calculate the PID were provided in CGE&Y's PID Data Element Summary Report. This report identified data sources on an element-by-element basis, as to being available or unavailable to the Pseudo-CLEC. This report determined:

a. Whether an element was returned to the Pseudo-CLEC via "gateway notifiers" and validated as part of the data reconciliation process.

b. If data were not available to the Pseudo-CLEC, whether the data element was available to the Pseudo-CLEC as part of the FT by other means.

248. Because of the problems identified in the report, CGE&Y provided the required data reconciliation with the Data Reconciliation Report for the Functionality Test Results and the Functionality Test Results Comparison Report. These are discussed in the next two sections.

e. Data Reconciliation Report for the Functionality Test Results

249. CGE&Y undertook an extensive Data Reconciliation process where all the data elements captured by the Pseudo-CLEC through the gateway notifiers were compared to corresponding Qwest ad hoc data elements. Discrepancies were noted using the Incident Work Order (IWO) process as defined in Appendix I of the TSD. This process was intended to verify that all the records submitted by the Pseudo-CLEC were captured by Qwest and contained within its source data, and that the Qwest data did not contain additional or incorrect records. Any material discrepancies identified between the Pseudo-CLEC and the Qwest ad hoc data resulted in CGE&Y replacing the ad hoc data element with the Pseudo-CLEC data. Results of this data reconciliation process are documented in CGE&Y's Data Reconciliation Report, which is Appendix L to the OSS Test Final Report. Section 2.5 results (of the CGE&Y OSS Test Final Report) were then updated to reflect the results that would have been obtained using the independently gathered Pseudo-CLEC data. It was CGE&Y's opinion that this satisfied the TSD requirement to independently calculate measures using the Pseudo-CLEC data.

250. CGE&Y's data reconciliation of information provided to the Pseudo-CLEC via gateway notifiers verified that with few exceptions, Qwest included all Pseudo-CLEC activities in its ad-hoc datasets used for §271 performance measurement data processing. Moreover, the data reconciliation verified that the majority of data elements contained in the Qwest ad hoc data matched those captured by the Pseudo-

CLEC and CGE&Y. CGE&Y issued 19 IWOs as part of the data reconciliation process. Each of these IWOs was subsequently closed based on Qwest's resolution. In fact, of the discrepancies noted in the data reconciliation report, only Pseudo-CLEC data for BI-2 and BI-4 were found to be materially different from Qwest ad-hoc data. In these cases, CGE&Y amended results in §2.5 of the Final OSS Test Report. In addition, Qwest instituted fixes which CGE&Y verified, so that Qwest's ad-hoc data could be relied upon for future results.

f. Functionality Test Results Comparison Report

251. The data reconciliation process did not validate all the Qwest ad-hoc data elements that are used to calculate §271 performance measurement results. The Functionality Test Results Comparison completed the data validation process. For each performance measurement in Appendix C of the MTP, CGE&Y calculated results for a corresponding aggregated measure using data elements available in the Pseudo-CLEC data. CGE&Y compared these results to results calculated using Qwest ad-hoc data for similarly aggregated measures. The results comparison showed that in most cases, there was a high level of agreement between results calculated from Qwest ad-hoc and Pseudo-CLEC data. For those cases where results indicated differences, CGE&Y issued seven IWOs. CGE&Y subsequently closed these 7 IWOs based on Qwest's resolutions.

252. CGE&Y's analysis did reveal that due dates transmitted to the Pseudo-CLEC via the original FOC did not match due dates recorded in RSOR in a large number of cases (See AZIWO2130). These discrepancies were the result of manual errors on Qwest's part in providing the FOC to the Pseudo-CLEC. The due date provided on the service order was determined per the service interval guide but was different than the due date transmitted via the FOC. CGE&Y validated that Qwest has instituted several quality control mechanisms to ensure FOC accuracy and agreement with the service order due date, and retest results show that discrepancies have been significantly reduced.

253. CGE&Y's analysis of Functionality Test Measure results did not reveal any significant or systemic errors in data elements contained in Qwest ad-hoc data. In fact, discrepancies found were generally due to the Pseudo-CLEC not receiving the same data element that is used for measurement calculation purposes. Therefore, CGE&Y is confident that Qwest's ad-hoc data is are including all CLEC transactions, and the data elements associated with CLEC transactions are accurate and complete.

g. CGE&Y's Conclusions

254. Based on the findings of the described data validation process CGE&Y finds that Qwest performance results accurately reflect performance observed by CLECs. For the most part, the number and severity of discrepancies identified in Qwest's ad-hoc data were immaterial and had no significant impact on performance results. In those cases where data discrepancies were more severe, CGE&Y verified that Qwest has fixed its processes and is now accurately reporting performance results or is providing the correct data element to the CLEC. Therefore the findings as presented in §2.5 of the Final OSS Test Report for the Pseudo-CLEC can be relied on for parity/disparity

determinations. More importantly, the Qwest published CLEC commercial results can be relied on for parity/disparity determinations going forward, based on CGE&Y's validation of Qwest's fixes.

h. Liberty Report on Qwest Performance Measurement Data Reconciliation

255. The Liberty Consulting Group *(Liberty)* conducted an audit of Qwest's performance measures for the Regional Oversight Committee (ROC), and issued the final report from that audit on September 25, 2001. As an extension to the audit, and through its Change Request process, the ROC requested that Liberty conduct a "data validation to resolve any debates concerning the accuracy of performance data emanating from particular ROC PIDs." (ROC Change Request #20.) Certain CLECs have expressed concerns about the accuracy of Qwest's reported performance results as they relate to service that they have been receiving. The ROC decided to conduct this data reconciliation work in order to test those concerns. Liberty's performance measures audit applied to all of the ROC states. Although Arizona is not participating in the ROC §271 OSS Test, Liberty was requested to include Arizona in the scope of its data reconciliation work. The following paragraphs provide the results of Liberty's review of Arizona data.

256. Three CLECs, AT&T, WorldCom and Covad, asked Liberty to reconcile data on a few of Qwest's performance measures. These CLECs focused exclusively on unbundled loops, line sharing, and interconnection trunk performance. Given that CGE&Y and Liberty had already audited Qwest's performance measures and found them accurate and reliable, to participate in the reconciliation the CLECs were required to come forward with evidence showing that Qwest's performance data were inaccurate.

257. In the course of its data reconciliation work in Arizona, Liberty found that Qwest did make some errors that affected performance results. However, those errors were generally either:

a. Of the kind and at levels to be expected at the front end of the performance measurement process, where people must manually enter vast amounts of information, or

b. Appeared to be honest errors in judgment.

258. The amount of these errors, in relation to the total amount of information required for the performance measures, did not exceed what Liberty considers to be expected levels, even under a carefully operated set of measurement activities. Moreover, there was no evidence that Qwest purposely took steps to make its performance figures appear better than they actually were. With the exception of a programming problem associated with measure OP-15 and a failure to report a group of Firm Order Confirmations in June 2001, the errors were not systemic, nor did they apply to a significant percentage of the performance measure results.

259. With the Arizona report, over the past four months Liberty has issued five Interim Data Reconciliation Reports and a Final Report on April 19, 2002, each based on a detailed order by order review of various records. In total, Liberty has analyzed well over 10,000 orders. These reports describe Liberty's detailed review of performance data from the states of Arizona, Colorado, Nebraska, Washington, Oregon, Utah and Minnesota.

260. The total reconciliation effort resulted in Liberty issuing one Exception report and 13 Observation reports. All 14 of these matters have been closed. About half of the problems that Liberty identified were process or system type matters. The other half of the problems was associated with human errors. In some cases Liberty suggested that the human error issues identified could be used to identify areas for future monitoring or auditing of Qwest's performance measures. In its Final Report Liberty stated "none of the human-error issues combined with Qwest's corrective actions caused Liberty to believe that Qwest's current performance reporting could not be relied upon as a measure of Qwest's actual performance.

261. In the Final Report Liberty summarized its original audit and its reconciliation work as follows: " . . . and on the basis of its audit and data reconciliation work that has spanned nearly two years, and on the resolution and corrections of the matters addressed in the 84 Observation and Exception reports that it has issued, Liberty believes that Qwest's performance reporting accurately and reliably reports Qwest's actual performance".

262. Including all states in this Liberty data reconciliation effort is important because of the fact that Qwest systems are common, and the operations centers handling the various states are common. Data problems found are therefore common to all states. The corrections applied on the findings in any one state also correct the problem for all states.

i. Staff Discussion and Recommendation

263. Based on the work done in the Arizona three-phased OSS Test approach, and the work from the Liberty Consulting Data Reconciliation, Staff is of the opinion that Qwest commercial reported CLEC data are accurate. These data can be relied upon in determining Qwest performance in meeting its 271 obligations.

264. Staff observes that impact of the Performance Measurement Evaluation transcended the OSS Test and profoundly influenced Qwest's perception of PID development and data verification. At the outset of the OSS Test, PID development was perfunctory, with only a minimal set of PIDs directed to CLEC performance measurements. [42]Data correlation and crosschecks were limited or non existent. Now a comprehensive set of PIDs is reported on a monthly basis. Extensive data analysis and

[42] Before the OSS Test began, Staff held several workshops with CLEC and Qwest participation and developed a comprehensive set of PIDs for use in the test, as well as for monitoring post- test performance. A subset of these PIDs have been incorporated in the PAP Plan.

verification has provided a data accuracy assurance; and the relationship of data available to the CLECs and Qwest's commercial data are well understood, providing the basis for Staff's recommendations for further process improvements.

265. Staff recommends that the Commission find that Qwest's commercial reported data are accurate and meet §271 requirements.

8. QWEST SERVICE PERFORMANCE COMMERCIAL DATA EVALUATION

a. Background

266. The best determinant of how Qwest provides service to the CLECs is through actual "commercial data" reported performance. . The Federal Communications Commission has made clear in its Verizon Massachusetts 271 Order that "the most probative evidence of nondiscriminatory access to interconnection and UNEs is actual commercial usage. This section provides an overview of Qwest current performance based on its published performance data. The data reviewed are from the Qwest March monthly report entitled "Qwest's Arizona March 2001-February 2002 Service Performance Results Report" (covering the recent twelve month period from March 2001 through February 2002). This report is available on Qwest's web site at www.qwest.com/wholesale/results/index .html.

267. These results are for Performance Indicator Definitions (PIDs) primarily developed prior to the beginning of the OSS test. During the development of the MTP, an initial review of Qwest reported performance results indicated a need for significant additions and refinements. Workshops to develop the required set of PIDs were held with CLECs and Qwest participation, and facilitated by the Staff. In addition to developing the measurements, performance standards were established ("benchmarks" if there were no Qwest equivalents; or "parity" if there were retail equivalents). These PIDs were utilized by the TA for evaluation of Qwest's performance during the OSS Test. However, the PIDs underwent refinement, under the guidance of the TAG, as the Test was executed. Refinements were based on findings from the Test, as well as other sources (To the extent possible, refined PIDs were utilized by the TA). The set of PIDs that evolved is to be utilized by the ACC for evaluating Qwest's performance in providing service to the CLECs and for the Performance Assurance Plan (PAP).

268. Exhibit 9-1 (in the previous Section of this report) provides an index of the current set of PIDs. The PIDs provide information on Qwest performance in the following areas: OSS system availability and response times, Pre-Order "notifiers" (Firm Order Confirmation (FOC), Rejects, Jeopardies), Service Ordering and Provisioning, Maintenance and Repair, Billing, Data Base Updates, Directory Assistance and Operator Service, Network Performance, Collocation. There are currently 52 such "base" measurements. However, these have been disaggregated into sub-measures for types products, dispatched, non-dispatched, MSA, non-MSA, Zones, etc. The result is performance measures in the hundreds. The scope of these categories is reflected in Exhibit 3-6.

b. Performance Data Accuracy

269. One of the main outcomes of the OSS Test is an evaluation of the accuracy of Qwest data reporting. Prior to test execution, the Performance Measurement Audit was conducted. This audit verified that calculations of PID measurements were performed accurately. This accuracy of the data also depends on the accuracy of the source or input data. OSS Test results were utilized in determining that the source data were gathered accurately. This data collection was verified through reconciliation of the test database from the Pseudo-CLEC and the Qwest performance reporting database (Qwest ad-hoc database). This data verification has been described in detail in Section 9.0 of this report.

270. In addition to the data verification from the OSS Test, Liberty Consulting was asked to provide data verification using data from the participating CLECs. This effort is also described in detail in Section 9.0 of this report.

62. Data accuracy assurance was a primary OSS Test objective. This objective was accomplished through a three-stage process: the conduct of a Performance Measurement Audit, Functionality Data Reconciliation, and Functionality Test Results Comparison. This three-stage process represents a complete cradle to grave review and validation of Qwest's performance measurement data collection and processing.

271. The OSS Test program commenced only after the conduct of an extensive audit of Qwest's performance measurement reporting process. All measures, and virtually every sub-measure and level of disaggregation were ultimately audited. One major result of the PMA was the development and implementation of a series of PID improvements. The breakdown of improvements to the Arizona PID is as follows:

272. Thirty IWOs addressed the need for clearer documentation or actual performance measurement (PM) improvements, 38 IWOs resulted in improvements to the code Qwest utilized in producing performance measurement results, 20 IWOs resulted in revisions or updates to Qwest's process documentation to reflect actual processes used to produce the measurement results in order to comply with the requirements of the current PID.

c. Commercial Data Overview

273. A review of the current Qwest Arizona March 2001-February 2002 Service Performance Results Report Shows that in every reported result, with only one or two exceptions, Qwest is meeting the prescribed benchmark, or is exceeding parity-level service. This represents a significant improvement relative to the first two quarters of 2001, observed during the beginning of the OSS test. At that time Qwest had numerous service failures evidenced in its report.

274. In the Functionality Test performed during the first two quarter of 2001, the TA reported a number of service performance failures either as a result of the Test itself or from the reported commercial performance data. These failures are covered in

Section 2.5 of the CGE&Y Final OSS Test Report and summarized in Exhibit 3-9 of this report. Reviewing current data for an update on how past service failures have been addressed indicates that all of the previous parity service problems have been corrected.

275. Some examples of current performance measures and key results are provided below.

- The first result is for OP-3A Installation Commitments Met (Percent)-Dispatches within MSA. The first chart, Figure 10-1 is for Residence (Resale) and the second chart is for UNE-P. The chart furnishes the numerator, denominator, the calculation, and the "Modified Z Score" for PAP calculation purposes. The last column shows the "parity score." A negative number in this column indicates parity or better for the CLEC. Figure 10-1 indicates that, for Residence, the CLECs have received even better service than Qwest's retail customers for the last twelve months.

Residence									
Date	CLEC Num	CLEC Den	CLEC Resu	CLEC Std	Qwest Num	Qwest Den	Qwest Resu	Mod Z Scr	Parity Scr
Mar-01	501	526	95.25%	21.26%	20244	21351	94.82%	-0.41	-1.27
Apr-01	404	421	95.98%	19.68%	18970	19937	95.12%	-0.52	-1.02
May-01	515	523	98.68%	11.49%	20678	21533	96.03%	-3.05	-2.85
Jun-01	512	519	98.84%	10.70%	21237	22111	96.05%	-3.22	-2.96
Jul-01	555	570	97.37%	16.01%	22790	23561	96.77%	-0.8	-1.49
Aug-01	532	544	98.71%	11.27%	27195	28124	96.70%	-2.61	-2.58
Sep-01	376	385	97.66%	15.11%	20814	21424	96.22%	-1.47	-1.89
Oct-01	380	385	98.45%	12.37%	22710	23352	97.25%	-1.42	-1.87
Nov-01	313	316	99.05%	9.70%	20947	21424	97.77%	-1.53	-1.90
Dec-01	270	280	96.43%	18.56%	18871	19575	96.40%	-0.22	-1.01
Jan-02	254	269	94.14%	13.51%	20213	20831	97.03%	-1.06	-1.65
Feb-02	295	297	99.66%	5.79%	16566	17129	96.71%	-2.83	-2.72

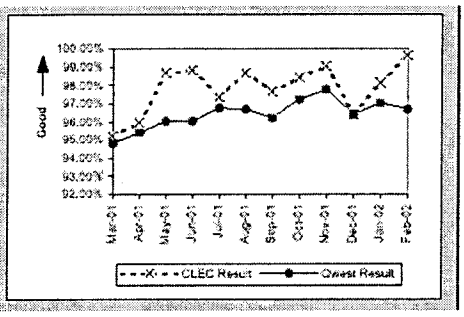

Figure 10-1 - OP-3A Installation Commitments Met (Percent)-Residence (Resale), Dispatches within MSA.

The next chart, Figure 10-2 for UNE-P indicates that the CLECs have received parity or better service since September of 2001.

UNE - P (POTS)									
Date	CLEC Num	CLEC Den	CLEC Resu	CLEC Std	Qwest Num	Qwest Den	Qwest Resu	Mod Z Scr	Parity Scr
Mar-01	50	54	92.59%	26.19%	23646	25140	94.05%	0.5	-0.7
Apr-01	32	35	91.43%	27.99%	21344	22519	94.80%	0.88	-0.47
May-01	65	69	94.20%	23.37%	23813	24991	95.29%	0.47	-0.71
Jun-01	89	97	91.75%	27.51%	24329	25456	95.57%	1.66	0.02
Jul-01	75	80	93.75%	24.21%	26081	27107	96.22%	1.11	-0.39
Aug-01	97	107	90.65%	29.11%	30815	32056	96.13%	2.53	0.54
Sep-01	82	85	97.65%	15.16%	23829	24886	95.75%	-0.86	-1.52
Oct-01	100	104	96.15%	19.23%	26466	27319	96.88%	0.47	-0.71
Nov-01	129	132	96.99%	17.08%	24143	24801	97.35%	0.82	-0.61
Dec-01	152	158	96.20%	19.11%	21690	22674	95.66%	-0.33	-1.2
Jan-02	129	134	96.27%	18.96%	23516	24398	96.38%	0.13	-0.92
Feb-02	121	123	98.37%	12.68%	19636	20426	96.13%	-1.29	-1.78

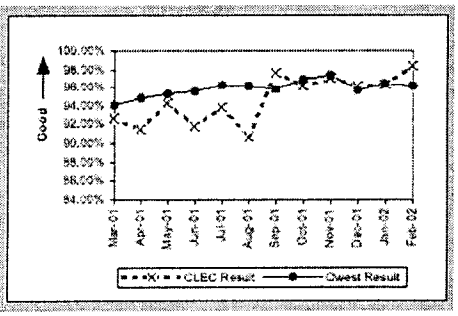

Figure 10-2 - OP-3A Installation Commitments Met (Percent)-UNE-P, Dispatches within MSA.

The following charts are for Maintenance and Repair. The first two charts for MR-6A, Mean Time to Restore (Hours: Minutes) – Dispatches within MSAs are for "Residence"

(Figure 10-3) and "UNE-P" (Figure 10-4). Both charts indicate parity or better service for CLECs for the past twelve months.

Residence									
Date	CLEC Num	CLEC Den	CLEC Resu	CLEC Std	Qwest Num	Qwest Den	Qwest Resu	Mod Z Scr	Parity Scr
Mar-01	5968:38	572	10:25	10:04	536350:56	37913	14:12	-6.1	-4.71
Apr-01	5877:55	459	8:27	8:22	380394:40	32904	11:38	-6.27	-4.89
May-01	4742:21	481	9:52	10:34	394342:43	34036	11:35	-3.25	-2.98
Jun-01	6494:52	540	12:02	11:36	441643:06	34997	10:46	-2.75	-2.69
Jul-01	6052:22	467	10:49	9:32	502772:15	38942	13:37	-4.19	-3.55
Aug-01	7560:45	615	12:45	12:25	624985:26	41727	14:59	-3.95	-3.4
Sep-01	4088:19	335	12:10	10:27	424352:52	29076	14:36	-3.18	-2.94
Oct-01	2869:25	250	10:15	9:01	437289:38	32057	13:38	-4.07	-3.47
Nov-01	2627:39	241	10:54	11:46	367852:34	27690	13:17	-2.48	-2.51
Dec-01	1364:09	128	10:29	8:48	459224:00	29575	15:32	-3.92	-3.08
Jan-02	866:23	114	7:26	7:01	296054:36	24925	11:53	-3.67	-3.23
Feb-02	704:19	95	7:25	6:58	232772:17	20388	11:25	-3.08	-2.87

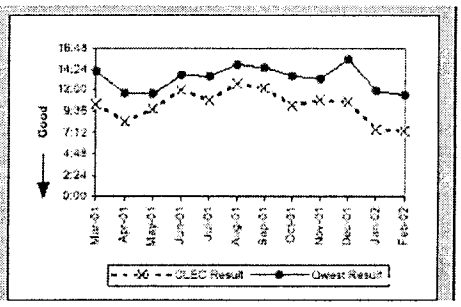

Figure 10-3 - Mean Time to Restore (Hours: Minutes) – Dispatches Within MSAs For "Residence"

UNE - P (POTS)									
Date	CLEC Num	CLEC Den	CLEC Resu	CLEC Std	Qwest Num	Qwest Den	Qwest Resu	Mod Z Scr	Parity Scr
Mar-01	1257:56	112	11:07	11:41	591485:49	42459	13:56	-2.02	-2.23
Apr-01	978:40	105	9:47	8:00	418835:29	38839	11:22	-1.4	-1.86
May-01	1187:48	136	8:44	11:05	431743:02	39251	11:17	-2.54	-2.55
Jun-01	1368:37	150	9:03	8:58	519234:46	38954	13:20	-3.66	-3.22
Jul-01	1518:14	158	9:37	10:32	546549:28	41236	13:15	-3.17	-2.92
Aug-01	2760:35	252	10:57	12:56	681994:20	46780	14:35	-3.88	-3.36
Sep-01	2077:00	158	12:22	13:45	465419:36	32761	14:12	-1.72	-2.04
Oct-01	2008:32	189	10:23	10:56	476454:57	35803	13:18	-2.65	-2.61
Nov-01	1407:15	133	10:35	13:12	401217:12	30806	13:01	-1.91	-2.16
Dec-01	1367:27	131	10:35	9:47	500372:49	32831	15:14	-3.8	-3.31
Jan-02	1256:28	151	8:19	10:25	324426:29	27846	11:39	-3.29	-3
Feb-02	1893:38	150	10:35	10:23	256252:50	23015	11:06	-0.56	-1.34

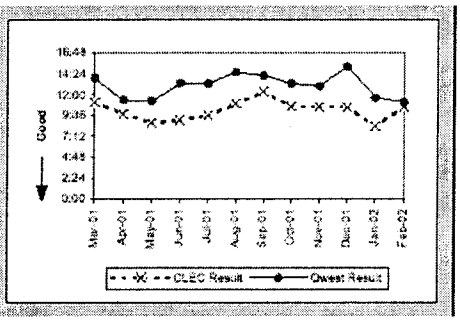

Figure 10-4 - Mean Time to Restore (Hours: Minutes) – Dispatches Within MSAs For UNE-P

The following two charts are for MR-9A Repair Appointments Met (Percent)-Dispatches within MSAs. These charts are for Residence (Figure 10-5) and UNE-P (Figure 10-6) and show results similar to those shown on the two preceding charts.

Residence									
Date	CLEC Num	CLEC Den	CLEC Resu	CLEC Std	Qwest Num	Qwest Den	Qwest Resu	Mod Z Scr	Parity Scr
Mar-01	577	594	96.13%	19.29%	36777	39670	92.71%	-3.18	-2.93
Apr-01	459	474	96.84%	17.51%	32982	34462	93.09%	-3.19	-2.94
May-01	474	502	94.42%	22.95%	33038	35531	92.98%	-1.26	-1.77
Jun-01	534	558	95.70%	20.29%	33682	36662	91.87%	-3.28	-3
Jul-01	464	477	97.27%	16.28%	36019	38660	93.11%	-3.67	-3.17
Aug-01	622	652	95.40%	20.95%	40879	43871	93.18%	-2.23	-2.36
Sep-01	335	351	95.73%	20.23%	28323	30453	93.01%	-1.99	-2.21
Oct-01	276	292	94.52%	22.76%	31302	33526	93.37%	-0.79	-1.48
Nov-01	240	248	96.77%	17.67%	27221	28912	94.15%	-1.75	-2.07
Dec-01	127	132	96.21%	19.09%	29086	31112	93.49%	-1.27	-1.77
Jan-02	115	118	100.00%	0.00%	24826	26096	94.36%	-2.63	-2.6
Feb-02	91	95	95.95%	10.21%	20048	21030	95.33%	-1.67	-2.01

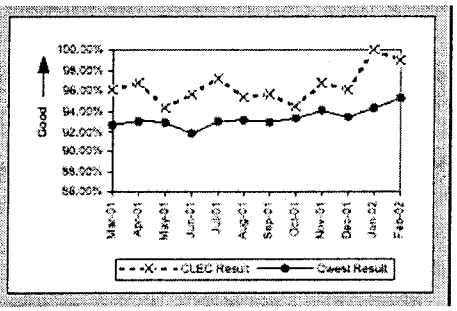

Figure 10-5 - MR-9A Repair Appointments Met (Percent)-Dispatches within MSAs for "Residence"

The following chart (Figure 10-6) for UNE-P indicates parity or better service since June 2001 except for September.

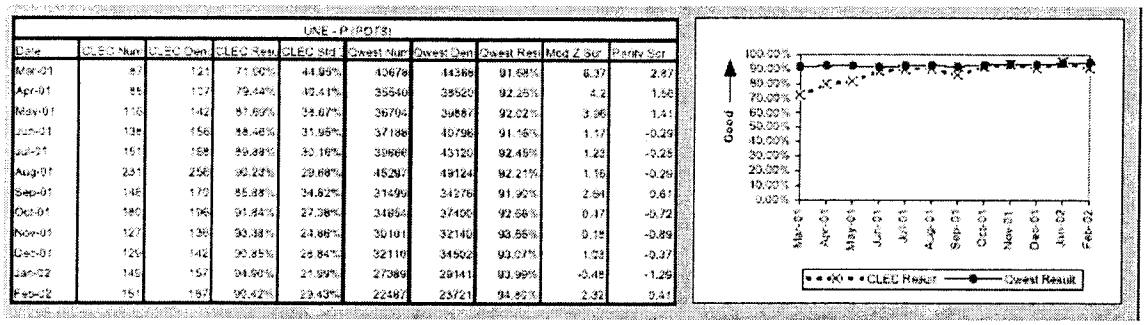

UNE - P (PO73)									
Date	CLEC Num	CLEC Den	CLEC Resu	CLEC Std	Qwest Num	Qwest Den	Qwest Resu	Mod Z Scr	Parity Scr
Mar-01	87	121	71.90%	44.99%	40678	44369	91.68%	6.37	2.87
Apr-01	85	127	79.44%	40.41%	35540	38520	92.25%	4.2	1.56
May-01	116	142	81.69%	38.67%	36704	39887	92.02%	3.96	1.41
Jun-01	138	156	88.46%	31.95%	37188	40796	91.16%	1.17	-0.29
Jul-01	151	168	89.88%	30.16%	39668	43120	92.45%	1.23	-0.25
Aug-01	231	256	90.23%	29.68%	45297	49124	92.21%	1.16	-0.29
Sep-01	148	173	85.88%	34.62%	31499	34276	91.90%	2.84	0.61
Oct-01	180	196	91.84%	27.38%	34854	37400	92.56%	0.47	-0.72
Nov-01	127	136	93.38%	24.86%	30101	32140	93.65%	0.15	-0.89
Dec-01	129	142	90.85%	28.84%	32110	34502	93.07%	1.23	-0.37
Jan-02	145	157	94.90%	21.99%	27389	29141	93.99%	-0.48	-1.29
Feb-02	151	157	96.42%	19.43%	22487	23721	94.80%	2.32	0.41

Figure 10-6 - MR-9A Repair Appointments Met (Percent)-Dispatches within MSAs for "UNE-P"

The chart below (Figure 10-7) for MR-7D Repair Repeat Report Rate (Percent), Zone One indicates problems with parity for repeat reports in June, October, November, January and February. However, for this type of facility, trouble report handling and repair are joint responsibility between the CLECs and Qwest. To provide information relative to this, Qwest has begun publishing an exceptions chart (Figure 10-8) for MR-7D that excludes reports for "Test OK" and "No Trouble Found." This is the second chart below and demonstrates parity for all months reported except for October. It may be inferred from this chart that Qwest and the CLECs need to work closer together on trouble clearing for services that require both parties to provide the service.

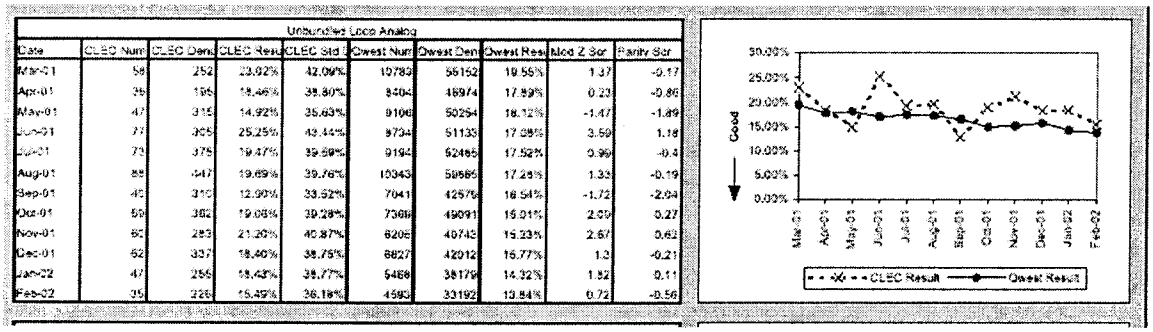

Unbundled Loop Analog									
Date	CLEC Num	CLEC Den	CLEC Resu	CLEC Std D	Qwest Num	Qwest Den	Qwest Resu	Mod Z Scr	Parity Scr
Mar-01	58	252	23.02%	42.09%	10789	55152	19.55%	1.37	-0.17
Apr-01	35	195	18.46%	38.80%	8504	46974	17.89%	0.23	-0.86
May-01	47	315	14.92%	35.63%	9106	50254	18.12%	-1.47	-1.89
Jun-01	77	305	25.25%	43.44%	9734	51133	17.05%	3.59	1.18
Jul-01	73	375	19.47%	39.59%	9194	52465	17.52%	0.99	-0.4
Aug-01	85	447	19.69%	39.76%	10343	59865	17.28%	1.33	-0.19
Sep-01	40	310	12.90%	33.52%	7041	42576	16.54%	-1.72	-2.04
Oct-01	59	382	15.08%	39.28%	7369	49091	15.01%	2.09	0.27
Nov-01	60	283	21.20%	40.87%	6206	40745	15.23%	2.67	0.62
Dec-01	62	337	18.40%	38.75%	6827	42012	16.77%	1.3	-0.21
Jan-02	47	256	18.43%	38.77%	5468	38179	14.32%	1.82	0.11
Feb-02	35	226	15.49%	36.18%	4593	33192	13.84%	0.72	-0.56

Figure 10-7 - MR-7D Repair Repeat Report Rate (Percent) – Zone One

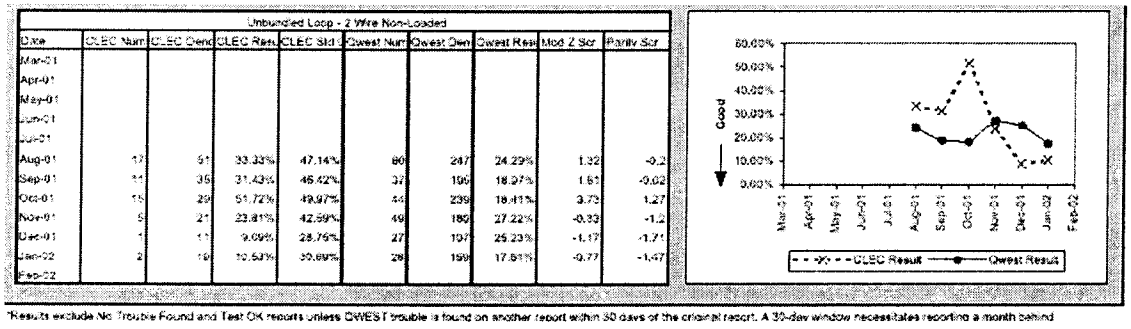

Unbundled Loop - 2 Wire Non-Loaded									
Date	CLEC Num	CLEC Den	CLEC Resu	CLEC Std D	Qwest Num	Qwest Den	Qwest Resu	Mod Z Scr	Parity Scr
Mar-01									
Apr-01									
May-01									
Jun-01									
Jul-01									
Aug-01	17	51	33.33%	47.14%	60	247	24.29%	1.32	-0.2
Sep-01	11	35	31.43%	46.42%	37	196	18.87%	1.61	-0.02
Oct-01	15	29	51.72%	49.97%	44	239	18.41%	3.73	1.27
Nov-01	9	21	23.81%	42.59%	49	180	27.22%	-0.33	-1.2
Dec-01	1	11	9.09%	28.75%	27	107	25.23%	-1.17	-1.71
Jan-02	2	19	10.53%	30.69%	28	159	17.61%	-0.77	-1.47
Feb-02									

*Results exclude No Trouble Found and Test OK reports unless QWEST trouble is found on another report within 30 days of the original report. A 30-day window necessitates reporting a month behind

Figure 10-8 - MR-7D Repair Repeat Report Rate (Percent) – Zone One Exceptions Chart

d. Staff Discussion and Recommendations

276. As discussed in Section 10.2, Staff believes the outcomes of the two independent data reconciliations verify that the performance data being reported by Qwest are accurate. Qwest commercial data reports can be relied upon to provide information on how Qwest is performing as a "supplier of service" to the CLECs.

277. Commercial data that have been audited are even more concrete evidence of Qwest's satisfaction of §271 requirements than are OSS Test Data. This type of data reflects Qwest's actual performance in providing service to CLECs. Based on the "Results" data for the last twelve months through February 2002, Staff concludes that Qwest is providing parity or better service to CLECs and satisfies §271 requirements in this area. Staff acknowledges the significant improvement that Qwest has made in service delivery to CLECs since the start of the OSS Test.

278. Staff recommends that the Commission find that Qwest satisfies §271 requirements with respect to commercial data.

D. VERIFICATION OF COMPLIANCE

279. CGE&Y found that based on its testing and evaluation of Qwest's OSS, Qwest met the applicable standards established for the test. However, CGE&Y observed opportunities for Qwest to improve its wholesale performance, which may be beneficial to Qwest and to CLECs. CGE&Y did not believe that implementation of any of these recommendations is required to meet OSS test standards, and so stated in its Final OSS Test Report. These recommendations are listed on Exhibit 11-1.

280. Staff concurs with CGE&Y Recommendations 2 through 9, which are improvement recommendations for Qwest systems. Staff agrees that these recommendations would be beneficial to the CLECs.

281. However, Staff disagrees with Recommendation 1. This recommendation provides for an independent audit of all performance measures on a quarterly schedule. This requirement borders on the onerous since it would result in almost continuous auditing. Furthermore, the Arizona Performance Assurance Plan (PAP) provides for an independent audit of Qwest performance measures at an eighteen-month interval. Staff believes the PAP plan requirement is adequate.

282. Furthermore, Staff has additional recommendations that Qwest should implement. These recommendations, however, are not required to be implemented prior to receiving 271 approval, but should be agreed to by Qwest as a condition for granting 271 approval.

283. Staff recommendations are as follows:

a. Qwest should assess system improvements for reducing the IMA-GUI input steps required by CLECs. This effort should be conducted in conjunction with other system changes.

b. Qwest should agree to provide CLECs the ability to request ad-hoc data for performance measurement calculations for PIDs contained in the PAP. This would provide the most effective method for auditing the performance results provided by Qwest.

c. Qwest should test its Daily Usage File (DUF) provisioning to CLECs to ensure accurate and timely delivery of these records. This test should be conducted within 12 months and be conducted with Staff oversight.

d. The ACC should initiate a proceeding to develop and implement Wholesale Service Standards for Qwest.

284. Staff is of the opinion that each of the OSS Tests was successfully executed and their objectives have been fulfilled. Results of the OSS Tests demonstrated Qwest's operational readiness, performance, and capacity to provide access to preordering, ordering, provisioning, repair and maintenance, and billing. OSS functionality provided to CLECs in Arizona meets or exceeds the requirements of a competitor to do business in Arizona.

285. Staff deems the OSS Test portion of Qwest's Section 271 initiative to be complete. In Staff's opinion all the objectives of implementing a comprehensive independent Third Party administered OSS Test have been fulfilled. Staff believes the record compiled during the course of the OSS Test program will demonstrate to the ACC, the DOJ and the FCC, an appropriate degree of Qwest's operational readiness, performance, and capacity to provide access to preordering, ordering, provisioning, repair and maintenance, and billing OSS functionality to CLECs in Arizona. Staff anticipates that process improvements will continue, and that follow-up requirements on selected issues (e.g., CMP, SATE and emerging services) can be suitably monitored and addressed through supplemental filings and escalation procedures.

286. Commercial data have been reviewed by Staff that reinforce Staff's opinion as to Qwest's compliance. This type of data reflects Qwest's actual performance in providing service to CLECs. Based on the data showing results for the last twelve months (through February 2002) Staff concludes that Qwest is providing satisfactory service to CLECs and is 271 compliant in this area. Staff acknowledges the significant improvement that Qwest has made in service delivery to CLECs during the period of the OSS Test, and recommends that the Commission find that Qwest satisfies §271 requirements relative to its OSS.

287. In Staff's opinion, Qwest has made comprehensive OSS and process enhancements to the benefit of the CLECs during the OSS Test. Collectively, resolution

of problems encountered at the inception of the program and incorporation of wide-ranging improvements during the course of the three-year program have transformed Qwest's processes from many that were problematic and were inadequate for Section 271 compliance, into a consistent set of processes which now fulfills criteria for Section 271 relief.

288. In addition to enhancements that have been demonstrated through quantitative measures, significant qualitative changes have been realized as well. Staff perceived Qwest's relationship with the CLECs at the outset of the OSS test as unresponsive, with decisions being made unilaterally by Qwest, and CLEC interests marginalized. Results of the Relationship Management evaluation, the CMP development process and other tests suggest that Qwest's relations with CLECs are improving.

289. Staff recommends that the Commission find that Qwest is in compliance with FCC Section 271 requirements relative to the OSS test.

II. CONCLUSIONS OF LAW

1. Qwest is a public service corporation within the meaning of Article XV of the Arizona Constitution and A.R.S. Sections 40-281 and 40-282 and the Arizona Corporation Commission has jurisdiction over Qwest.

2. Qwest is a Bell Operating Company as defined in 47 U.S.C. Section 153(a)(35)(B) and subject to the prohibitions and permissions contained in 47 U.S.C. Section 271 that expressly pertain to Bell Operating Companies.

3. Qwest has sufficiently demonstrated before this Commission that it satisfies all requirements, relative to OSS Testing, and results thereof, specified by the FCC for Section 271 applicants in CC Docket No. T-00000A-97-0238.

Exhibit 2-1 - Types of Products Processed by Means of Electronic Gateways

Resale Test Scenarios

- Retail to Resale Conversion – Qwest customer converted to CLEC
- Resale – New connect of a CLEC customer
- Resale – Changed features of an existing CLEC customer
- Resale – Disconnected a CLEC customer
- Suspend and Restore - CLEC initiated a request to suspend a customer's service and later initiated a request to restore service.

Unbundled Network Elements for UNE-P and UNE-L

- Retail to UNE-P Conversion - Qwest customer converted to CLEC
- Retail to UNE-L - Qwest customer converted to CLEC, where unbundled loop was leased from Qwest by CLEC
- Retail to UNE-L with Number Portability - Qwest customer converted to CLEC, where unbundled loop with number portability was leased from Qwest by CLEC
- UNE-L New - End user established new service (i.e., UNE-L) with CLEC
- Retail to Local Number Portability - Qwest customer converted to a CLEC keeping the same TN but using only CLEC facilities; the customer took a Qwest number when moving to a CLEC
- UNE-P Change - Request to change a feature
- UNE-P Disconnect – Service was disconnected from the end-user
- UNE-L Disconnect – Service was disconnected from the end-user
- UNE-P to UNE-L – Conversion from platform to loop

Exhibit 2-2 - Test Exception Process
Page 1 of 1

The Test Exception Process included the following steps:

- Determination that an interface, system, or process tested by the Pseudo-CLEC and/or the TA did not meet objective criteria, standards or expectations.
- Creation of an IWO by the TA describing the issue raised after certifying that the failing is factual.
- Delivery of the IWO to all TAG members for review in accordance with Appendix I of the 271 TSD.
- Preparation of a written response to the IWO by Qwest describing any intended fixes.
- Qwest advising the TA that fix was complete and that retesting could be undertaken. Performance Acceptance Certificate Form (PACF), issued in accordance with Appendix I of the 271 TSD.
- Preparation of the re-test by the TA, including test scripts and cases for use by the Pseudo-CLEC, as appropriate.
- Completion of the test, subject to retest results, meeting criteria, standards, or expectations, and approval of the PACF by the TAG, in accordance with Appendix I of the TSD.
- Filing of comments, by Interested Parties (as required) regarding the Test Exception and the resolution and re-testing steps.
- Retesting, if determined necessary by the TAG, to determine if the fixes by Qwest resolved the problems causing the test case to fail. (All criteria for the test were fulfilled at that point.)
- Repeat of the process, as necessary, until the criteria were met, or Qwest notified the TA that no further work would be done to resolve the Exception.

Exhibit 2-3 - Additional Test Scenario Guidelines

- Any participant could initiate request for anew Test Scenario during test period.
- Initiator documented request in format provided by the TA, and submitted request to the Test Administrator, with copies to all participants.
- TA evaluated request and recommended its inclusion or rejection to the TAG.
- The TAG attempted resolution by consensus.
- If resolved, the TA implemented the resolution and notified all participants.
- If not resolved, the TAG escalated the request to the ACC Staff for decision. ACC Staff reached decision and notified participants accordingly.
- New Scenarios introduced during the test period tested accommodated within overall test timeline.

Exhibit 3-1 - Functionality Test Scope

Step	Functionality Test Scope
Pre-Order/ Order/ Provisioning Processes	Preordering is process that enables CLECs to query Qwest's databases to verify or obtain information necessary to issue a valid LSR. Ordering is process that CLECs use to format and issue LSRs to Qwest. Provisioning consists of the processes that Qwest uses to install the service or facility ordered. The pre-order, order, and provisioning. Functionality Test involves the following interfaces: ➢ EDI: Utilizing a Pseudo-CLEC to test the EDI preorder/order interface. ➢ IMA GUI: Using a combination of Pseudo-CLEC data and CLEC-supplied data for the IMA GUI pre-order/order test.
Maintenance and Repair Interfaces	"Maintenance and Repair" functionality used by CLECs to report end user and network troubles to Qwest, test the end user lines by MLT, sectionalize the trouble conditions, and check the status of the reported troubles. Any trouble, planned or unplanned, that occurred during the test process included as part of tests. Prescribed process utilized for retesting. Maintenance and Repair Functionality Testing involved the following interfaces: ➢ EB-TA: Collaboration with one or more CLECs to test the existing EB-TA interface, in conjunction with maintenance and repair test transactions. ➢ IMA GUI: Used Pseudo-CLEC data for maintenance and repair test transactions.
Billing Interfaces	"Billing" functionality used by Qwest to provide CLECs with accurate wholesale bills and usage data, as well as records, for the services, features, network elements (e.g., loop,) that were ordered and provisioned. Primary focus for testing of billing interfaces to validate the timeliness, accuracy, and completeness of the Qwest billing processes. Billing Functional Testing involved the following interfaces: ➢ EMI: (Exchange Message Interface) – An Alliance for Telecommunications Industry Solutions (ATIS) standard format for messages used for the interchange of telecommunications message information among telephone companies. Telephone companies use EMI to charge billable, non-billable, sample, settlement, and study data. ➢ EDI: (Electronic Data Interchange) – Standard that enables transmission of billing data between trading partners. EDI software translates fixed field or "flat" files that are extracted from applications into a standard format and hands off the translated data to communications software for transmission.
Functionality Test Coverage and Scenarios	Functionality Test coverage was established to ensure that the functionality being tested best reflected current and anticipated business environments. Development of the Scenario coverage designed to ensure that each Scenario provided value-added processing, and that duplication of common processes was minimized. Several iterations of similar tests sometimes necessary to gain reliable statistical samples of processing measures. TA analyzed ordering Scenarios to determine the proper mix of orders and the number of iterations required for loading and statistical validity. Functionality Test included flow-through of service orders as well as manual processes used to process orders. Flow-through orders were "electronically received" LSRs that had service orders accepted by the Service Order Processor without intervention. Functionality Test "Scenarios" were detailed Test Cases and subsequent orders, LSRs and ASRs. Scenarios encompassed preordering, ordering, provisioning, and billing. A subset of the Scenarios was included maintenance and repair activities.

Exhibit 3-2 - Functionality Test Roles

Participant	Functionality Test Roles
Test Administrator	Responsible for the generation of test cases and coordination of parties involved in the testing. TA monitored and oversaw testing effort, acted as test supervisor during day-to-day operations of the project, tracked issues that arose during the test, determined Root-Cause Analyses of issues with participating CLEC, Pseudo-CLEC and Qwest input, analyzed the outcome of test effort, and provided a feedback reports to the ACC.
Pseudo-CLEC	Created and ran the "test transaction generator," fulfilled role of Pseudo-CLEC, with the same responsibilities as the CLECs during the testing phases. Also responsible for customizing its "transaction generation" software to function with Qwest's OSS before testing began.
CLECs	CLECs selected by the ACC to participate in the testing effort provided input to test cases and Friendlies accounts (see below) based on the scenarios defined in Appendix B of the MTP. CLECs responsible for conducting tests and reporting outputs in accordance with instructions from the ACC and the TA.
Test Friendlies	Pool of 609 volunteer end-users, deemed "Friendlies", who volunteered the use of their physical locations to install test lines. (TAG members recruited Friendlies on behalf of the TA from their respective companies.) Since a production environment approach was used, the Friendlies accounts reflected "real" customers and facilities, and consisted of Qwest, CLEC, and ACC employees. A CLEC's own account was used on occasion. Qwest created 956 pseudo accounts as "record-only" retail test accounts to supplement test addresses provided by the Friendlies. Friendlies received packets of information detailing the types of transactions (calls). They were provided with test dates, and documentation pertaining to their test calls. Administration of the Friendlies program entailed: ➢ Determination of the number of Friendlies required, consistent with the total number of scenarios, conditions validated, and statistical confidence levels. ➢ Determination of the distribution and locations of Friendlies ➢ Identification of specific Friendlies and addresses ➢ Mapping of Friendlies and their locations to test scenarios and call scenarios ➢ Providing for environmental needs for Friendlies, with provisioning additional lines to the homes of the residential Friendlies so that existing service was not disrupted; and disconnection of these lines once the testing was completed ➢ Determination of the process associated with managing Friendlies and notifying them of testing responsibilities
Qwest	Tests were predicated on use of Qwest's systems, operations, and processes. As directed by the ACC and its consultant (DCI), Qwest acted in a supporting role, which included providing subject matter experts for consultation and support during test planning, preparation, execution, and analysis.

Exhibit 3-3 - Functionality Test Phases

Test Phase	Activities	Entrance Criteria	Exit Criteria
Test Planning	Baselined ACC Master Test Plan and necessary revisions; defined scope and objectives; developed Test Milestones; defined test management items (jeopardy management, issue management, etc.); defined test participants roles and responsibilities; defined the Test Scenarios; established the data approach; established the appropriate testing volumes; and determined the appropriate resources to support the test preparation and execution phases.	Entrance criteria established as prerequisites for initiating the FTs. These included: definition of the overall testing environment; establishment of the statistical methodology; identification of test iterations to establish the number of tests and volumes needed to ensure statistical soundness; identification of the test execution interval (number of days) to cover multiple billing periods and other constraints, such as installation intervals; identification of test participants and the associated roles of each; identification of test volumes, as to the number of Friendlies and test accounts, and the activities initiated by the Friendlies within the testing timeframe; identification of the Friendlies mix and locations; and management of test 'blindness'	Test Planning Phase exit criteria provided assurance that the work in subsequent phases was understood by all participants. Written planning outputs were supplied to the TA and reviewed in planning sessions. The exit criteria consisted of establishment of: Baselined test plan for each participant; Defined Test Milestones; and Defined schedule, including Critical Path items
Test Preparation (by Test Administrator)	Development of detailed test monitoring plans; development of detailed project plans; definition of OSS environment requirements; finalization of Test Scenarios and analyze the test coverage; identification and assignment of Friendlies; and creation of Friendlies test packages	Receipt and documentation of all participant's input to the test plan; acquisition and documentation of all participant's input as to the test specifications; and determination of available Friendlies	Completion of all activities in the test plans necessary for test execution; and Test Script review by the TA
Test Execution	CLEC participants, Pseudo-CLEC, and Qwest executed Test Cases according to the individual test plans; and documented test results, issues, resolution, and status. The TA: positioned staff at Pseudo-CLEC and CLEC facilities to observe the input and processing of transactions; conducted surveillance of Pseudo-CLEC interaction with Qwest in the resolution of issues; reviewed weekly status summaries on the current state of each test scenario; reviewed data submitted by test participants; determined whether the Pseudo-CLEC defined timeline of LSR submission was followed; reported problems uncovered in the test, tracked problem resolutions and retesting for resolution with the consensus of the TAG (as enumerated in the "Test Exception Process").	Baselined test plans for each participant; test Scripts for testing for each participant Friendlies preparation; operational readiness and availability of interfaces and systems required for the testing; executed system and access agreements, including assignment of required sign-on accounts and passwords; availability of appropriate SME staff; establishment of the Arizona Performance Measures; completion of evaluation of Qwest processes for data collection by TA and calculation of the Arizona Performance Measures	Review of all test specifications executed and classified as pass/fail according to the plan; Closure of outstanding major problems, as determined and concurred by the TA and the ACC; and verification of one or two billing cycles and a sufficient number of disconnects

Exhibit 3-3 - Functionality Test Phases

Test Analysis and Reporting (by Test Administrator)	Examination of data submitted by the Pseudo-CLEC for accuracy and completeness; analysis of complete transactional processing for each order; tracking issues that arose during testing; performing Root-Cause Analyses of all Issues and following the Test Exception process; recommending technical solutions to obstacles encountered during the test; preparing a report for the ACC.	Documentation of outcomes of the test execution phase.	A mandatory review session was conducted to complete this phase. Participants' results were incorporated in an integrated report and presented to the ACC. The TA completed its independent report for submission with the participants' results to the ACC.
Performance Measurement Test (by Test Administrator)	Evaluation of performance measurements calculated from data gathered during the FT designed to provide statistically valid assessment of Qwest's performance in providing service to the CLECs based on established performance measures.	Statistical Approach designed. Test orders executed by the Pseudo-CLEC; TA received all ad hoc data from Qwest for the functionality test phase. TA received all FT data from Pseudo-CLEC	TA analyzed all collected data. Declaration of either Parity/ Compliance or Disparity /Noncompliance for all measurements detailed in MTP Appendix C. Incident Report Submitted to TAG for all Disparity / Noncompliance declarations. All Performance Measures passed; and/or all parties agree test is concluded; and/or the ACC called end to test.

Exhibit 3-4 – PIDs Measurements Used In Conjunction With Functionality Test

GA-1	Gateway Availability- IMA-GUI
GA-2	Gateway Availability- IMA-EDI
PO-1	Pre-order/Order response times
PO-2	Electronic Flow-through
PO-3	LSR rejection notice interval
PO-4	LSRs Rejected
PO-5	FOCs on time
PO-6	Completion Notification
PO-7	Completion Notification Intervals
PO-8	Jeopardy Notice Interval
PO-9	Timely Jeopardy Notices
OP-3	Installation Commitments Met
OP-4	Installation Interval
OP-5	New Service Installation Quality
OP-6	Delayed Days (average)
MR-3	Out of service cleared within 24 hours
MR-4	All troubles cleared within 48 hours
MR-5	All troubles cleared within 4 hours
MR-6	Mean time to restore
MR-7	Repair repeat report rate
MR-8	Trouble rate
MR-9	Repair appointments met
MR-10	Customer and Non-Qwest related trouble reports
BI-1	Time to provide recorded usage records
BI-2	Invoice delivered within 10 days
BI-3	Billing accuracy- Adjustments for errors
BI-4	Billing completeness
OP-7	Coordinated Cutover Interval UNE
OP-13	Coordinated Cuts on Time

Exhibit 3-5 – Planned Testing Scenarios
Page 1 of 1

Testing Scenarios	Planned Orders Issued
UNE-Loop	140
Business POTS Install (Resale)	140
Business POTS Conversion (Resale)	140
Private Lines	50
ISDN – ADSL	50
UNE-P Rural	140
UNE-P Conversion	140
UNE-P Install	140
Residential POTS Install (Resale)	140
Residential POTS Conversion (Resale)	140
Scenarios Outside the Product Matrix	47
Totals	**1,267**

Exhibit 3-6 – Breakdown of Actual Orders Issued By Scenario and Product

Product Cell #	Scenario	Product	Number of Orders issued
1	UNE-Loop Planned 140 Issued 198	Install UNE-Loop Single Business Line	12
		Install UNE-Loop Multiple Business Lines	8
		Convert Retail to UNE-Loop Single Business Line	33
		Convert Retail to UNE-Loop Multiple Business Lines	10
		Change UNE-P to UNE-Loop Single Business Line	51
		Change UNE-P to UNE-Loop Multiple Business Lines	4
		Change CFA (Connecting Facility Assignment)	12
		Change Due Date	16
		Cancel UNE-Loop Order	23
		Disconnect UNE-Loop Single Line	14
		Disconnect UNE-Loop Multiple Lines	15
2	Business POTS Install (Resale) Planned 140 Issued 198	Install Single Business Line	105
		Install Multiple Business Lines	17
		Disconnect Single Business Line	43
		Disconnect Multiple Business Lines	33
3	Business POTS Conversion (Resale) [1] Planned 140 Issued 125	Convert Retail to Resale Single Business Line	81
		Convert Retail to Resale Multiple Business lines	37
		Migrate Retail to Resale	7
4	Private Lines Planned 50 Issued 61	Install Private Line	2
		Convert Retail Private line to Resale	59
5	ISDN – ADSL Planned 50 Issued 81	Install new ADSL-qualified UNE loop	3
		Convert retail to ADSL-qualified UNE loop	3
		Convert single line retail to DSL	22
		Install new Resale ISDN	15
		Convert Retail ISDN to Resale ISDN	21
		Change features on Resale ISDN	8
		Disconnect ADSL-qualified UNE-Loop	3
		Disconnect ISDN	6
6	UNE-P Rural [2] Planned 140 Issued 119	Convert Retail Single Business line to UNE-P	16
		Convert Resale to UNE-P Single Business Line	11
		Convert Resale to UNE-P Single Residence Line	35
		Convert Retail to Resale Single Business Line	12
		Convert Retail to Resale Single Residence Line	45

[1] Deficiency in the number of business qualified addresses prevented the execution of sufficient tests to meet the number planned.
[2] Deficiency in rural friendly addresses prevented the execution of sufficient tests to meet the number planned.

Exhibit 3-6 – Breakdown of Actual Orders Issued By Scenario and Product
Page 2 of 2

7	UNE-P Conversion Planned 140 Issued 229	Convert Retail to UNE-P Single Business Line	6
		Convert Retail to UNE-P Multiple Business lines	9
		Convert Retail to UNE-P Single Residence Line	40
		Convert Retail to UNE-P Multiple Residence Lines	15
		Convert Resale to UNE-P Single Business Line	25
		Convert Resale to UNE-P Multiple Business lines	18
		Convert Resale to UNE-P Single Residence Line	42
		Convert Resale to UNE-P Multiple Residence Lines	18
		Change features on Resale UNE-P	12
		Change PIC/LPIC	2
		Change Directory Listing	3
		Outside Move	1
		Disconnect UNE-P Single Line	26
		Disconnect UNE-P Multiple Lines	12
8	UNE-P Install Planned 140 Issued 140	Install UNE-P Single Line	127
		Install UNE-P Multiple Lines	13
9	Residential POTS Install (Resale) Planned 140 Issued 188	Install Single Residence Line	84
		Install Multiple Residence Lines	36
		Disconnect Single Residence Line	36
		Disconnect Multiple Residence Lines	32
10	Residential POTS Conversion [3] (Resale) Planned 140 Issued 136	Convert Retail to Resale Single Residence Line	90
		Convert Retail to Resale Multiple Residence Lines	46
Other	Scenarios Outside the Product Matrix Planned 47 Issued 92	Convert Retail CENTREX to Resale CENTREX	34
		Disconnect Resale Centrex	4
		Convert Retail PBX to Resale PBX	27
		Add/Remove Feature(s) on Resale PBX	2
		Disconnect Resale PBX	1
		Change of Directory Listing	14
		Disconnect Retail and port TN	10
Total Orders Issued			1567

[3] Friendly participation declined at the end of the test.

Exhibit 3-7 – Results of Functionality Test and Related Performance Measures

Functionality	Results
Pre-Order	**Key Results** Integration quality of Pre-order/Order data satisfactory for IMA-GUI. Integration quality of Pre-order/Order data for EDI deemed "CLEC-specific," depending on the CLEC's interface systems development effort. Enhanced address search criteria in IMA-GUI provides adequate information to enable Data Local Exchange Carrier (DLEC) to validate end user's address for loop qualification. IMA User's Guide on Qwest's Wholesale website reviewed. Verified that current documentation is available, and updates are posted. **Related Performance Measures** Met or exceeded parity for all strata - Electronic Flow-through (PO-2), Local Service Request (LSR) Rejection Notice Interval (PO-3), Percent LSRs Rejected (PO-4), Work Completion Notification (PO-6), Billing Completion Notification (PO-7), and Timely Jeopardy Notices (PO-9) met parity for all strata. . Failed to meet parity for some strata - FOC Timeliness (PO-5) and Jeopardy Notices (PO-8). Subsequently resolved.
Order	**Key Results** Verified Qwest's timeliness in processing of orders; and generation of acknowledgments for EDI, rejects, FOCs, and SOCs -- all associated with Pseudo-CLEC LSRs -- and related provisioning transactions. Established FOC timeliness for ASRs. Verified the timeliness and accuracy of Qwest's provisioning of requested services. Established that orders were provisioned as specified. All tests completed. Requirements designated by the MTP achieved. All outstanding incidents closed in accordance with the Testing Incidents Process. Performance benchmarks and parity requirements achieved in accordance with FT evaluation criteria. Integration quality of pre-order and order data for EDI dependent upon the level of development of the CLEC EDI interface. **Related Performance Measures** Met or exceeded parity for all strata, including Coordinated Hot Cut (CHC), Interval (OP-7), and Coordinated Cuts On Time (OP-13). Failed to meet parity for some strata - Installation Commitments Met (OP-3), Installation Intervals (OP-4), New Service Installation Quality (OP-5), and Delayed Days (OP-6). Subsequently resolved. **Observations** Qwest did not deliver SOC on completed orders approximately 25% of the time. IWO was submitted, SOC retested and subsequently closed. Qwest frequently used FOC process to communicate "due-date jeopardy" or a "reject message" after receipt of initial FOC.
Maintenance & Repair	**Key Results** Trouble tickets created via CEMR and EB-TA. MLTs successfully conducted on test lines. Trouble ticket status via CEMR and EB-TA requested and received, and status and results documented. Trouble ticket closure notifications, including disposition and cause codes received. Emergency notification for network events (e.g. switch failures) received. ➢ Of 63 trouble tickets submitted via CEMR, 40 trouble tickets planned and 23 unplanned. Of 23 unplanned troubles, 18 identified by the customers and 5 identified during the UNE Loop testing phase. All but 7 were successfully accepted. IWOs issued and closed ➢ Twenty-four planned trouble tickets successfully submitted via EB-TA. All but one met or bettered commitment date for clearing trouble. All Trouble/Maintenance test scripts executed and passed. Customer trouble histories successfully retrieved. Performance benchmarks and parity requirements were in accordance with the Functionality portion of the MTP. All IWOs addressed and re-tested with "passing results."

	Related Performance Measures Met or exceeded parity for all strata including Out of Service Troubles Cleared Within 24 Hours (MR-3), All Troubles Within 48 Hours (MR-4), All Trouble Cleared Within 4 Hours (MR-5), Repair Repeat Report Rate (MR-7), Repair Appointments Met (MR 9), and Customer and Non-Qwest Related Trouble Reports (MR-10). Failed to meet parity for some strata - Mean Time To Restore (MR-6). Subsequently resolved.
Billing	**Key Results** Billing information provided on wholesale bills to the Pseudo-CLEC successfully captured and documented. Paper and electronic copies of monthly bills evaluated for a two-month time period and the electronic copies of the daily usage feed (DUF) evaluated on a weekly basis, with concurrence by the TAG. Information provided by the Pseudo-CLEC and/or CLEC's billing data analyzed and documented Substantial billing discrepancies evidenced during billing validation as a result of human error. Training provided to preclude future occurrences. Qwest implemented Multi Channel Communication (MCC) to address issues. All outstanding issues logged in Master Issues Log closed. Multiple IWOs issued, resolved and closed. All required Qwest system corrections resolved, with the notable exception of the DUF. Results of other aspects of bill validation documented. Qwest upgraded DUF process to EMI version 18, enabling ADUF and ODUF records to be received by the Pseudo-CLEC. With respect to the reporting of DUF records, CGE&Y found that ODUF (local and originating calls) records were provided at an acceptable level of 95% of expected records during a supplemental evaluation. However, ADUF (access) records were provided at a lower rate of 44% during the initial evaluation. System fixes implemented by Qwest in response to four IWOs. All IWOs closed. **Related Performance Measures** Met or exceeded parity for all strata, including Time To Provide Recorded Usage Records (BI-1), Invoices Delivered Within 10 Days (BI-2), Billing Accuracy (BI-3), and Billing Completeness (BI-4). **Related Observations** Bills created by Qwest's Billing System captured billable items included in Qwest CSR. Pseudo-CLEC encountered no major issues related to Qwest billing system for the Pseudo-CLEC. When billing issues referred to Qwest, problems were corrected by means of system updates. System enhancements made to the Qwest billing systems; improvements incorporated into Qwest's internal processes. Order process between provisioning and billing performed as expected. Customer billable order items provisioned to account properly invoiced. System enhancements made to order entry system. Numerous discrepancies between the LSR and the CSR disclosed. Billable items on CSR not on the LSR and visa versa. Also multiple items on the CSR but only one item on LSR. Level 2 IWOs issued and all discrepancies ultimately resolved. Controlled supplemental test of the accuracy and timeliness of DUF records conducted to ensure no DUF issues were precipitated in Arizona pursuant to system updates by Qwest for generating DUF records for entire 14-State operating area. (Qwest's system updates occurred from September 2001 through December 2001.) A supplemental DUF evaluation was conducted in January and February, 2002. The TA generated test calls during and after account migrations and then reviewed the DUF records received. From the results of this review, four IWOs were issued (AZIWO1215, AZIWO2127, AZIWO2128 and AZIWO2129). Qwest's responses to IWOs, indicated that "system fixes" had been implemented, and retest based on these IWOs completed. All IWOs closed.

Exhibit 3-8 – Qwest Information Provided to CLECs for Ordering Emerging Services

Emerging Service	Functionality	Status
Enhanced Extended Loop (EEL)	Dedicated circuit originating at a CLEC collocation site within a ILEC Central Office and terminating at an End Users location served by a different ILEC Central Office -- but within the same Local Access Transport Area (LATA). An EEL is a combination of loop and interoffice facilities, and may also include multiplexing and concentration capabilities. The intent of the product line is to offer a CLEC the capability to provide local service to an end user without a collocation presence within the serving wire center. A proviso is that the CLEC certify that the circuit is carrying a "significant amount of Local Exchange Traffic." An EEL cannot be connected to a Qwest tariffed service.	Qwest's Wholesale website contains the information necessary to successfully submit an EEL LSR. When the LSR is submitted correctly the EEL-P service offering is obtainable by a CLEC through the Qwest OSS systems.
Unbundled Inter-Office Transport (UDIT)	Network element consisting of a single transmission path between Qwest end offices, serving wire centers or tandem switches in the same LATA and state. A UDIT can provide a path between a CLEC in one Qwest wire center and a different CLEC in another Qwest wire center. Paths may be Digital Service Level 0 (DS0), DS1, DS3, Optical Carrier Level 3 (OC3) OC12, OC48, OC192, and higher capacities as may evolve over time -- where facilities are available.	Documents related to the ASR process -- Technical Publication # 77389 and the UDIT Product Catalog (PCAT) -- provides sufficient information for a CLEC to successfully order a UDIT. CGE&Y reviewed status logs for 5 UDIT DS-3s that WorldCom ordered in October 2001. Circuits were designed from the Rhythms DSX jack to WorldCom with a Qwest cross connection to the Rhythms collocation cage. Based on this review, CGE&Y concluded that WorldCom successfully ordered UDITS. (Although UDITS reviewed were ordered in the Washington State the same centers handle UDIT orders for Washington and Arizona.) Problems encountered with ordering of some UDITS not directly related to the UDIT product, per se.
Unbundled Sub-Loop	Combination of two existing Qwest products, Unbundled Sub Loops and Field Connection Points (FCPs). Qwest currently has three Unbundled Sub-Loop product offerings in Arizona: ➢ Unbundled Feeder Loop (UFL) - The F1 or Feeder portion of an unbundled loop that originates at the Qwest Central Office and ends at the Feeder Distribution Interface (FDI) ➢ Unbundled Distribution Loop (UDL) - The F2 or Distribution portion of an Unbundled Loop from the FDI to the Network Interface Device (NID) on the end-user premises ➢ Unbundled Intra-Building Cable (IBC) - A Qwest provided distribution facility from a Multi-Tenant Environment (MTE) terminal, inside or attached to	Qwest's Wholesale website provides the necessary information to order Unbundled Sub Loops and Field Interconnection. This however, presumes the CLEC is experienced with the Outside Plant Configurations, (per Technical Publication # 77405, the Sub-Loop PCAT, and the Field Connection Point PCAT.)

	a MTE building, to the demarcation point (typically the NID) at the end-user premises inside the same building. Qwest also offers a FCP product, also known as Cross-Connect Collocation. An FCP is a demarcation point outside of the Qwest Central Office where CLEC facilities interconnect with Qwest facilities.	
Unbundled Dark Fiber (UDF)	Deployed, unlit pair of fiber optic cable or strands that connects two points within Qwest's network. Qwest offers UDF in the following configurations: ➢ UDF Interoffice Facility (UDF-IOF) - Provides a deployed route between two Qwest Wire Centers. ➢ UDF-Loop - Provides a deployed route between a Qwest Wire Center and the end-user premises, or a Qwest Wire Center and an approved outside plant structure (Controlled Environmental Vault (CEV), Hut, Remote Terminal, etc.). ➢ Extended UDF (E-UDF) - Provides a deployed route between a Qwest Wire Center and the CLEC's Wire Center.	Documents related to the UDF job aide (Technical Publication 77383) and the UDF PCAT provide the CLEC with information necessary to order a UDF.
Line Sharing	Provides a CLEC with an opportunity to offer an end-users advanced data services over an existing copper loop that already provides the end-user's analog voice-grade (POTS) service. Accomplished by using frequency range above voice band of the copper loop (where Qwest provides voice service to the end-user). Prior to ordering the Line Sharing product, the CLEC is required to provide a "POTS splitter" in the CLEC's collocation space. The POTS splitter separates voice and data traffic and enables the copper loop to be used for simultaneous DLEC data transmission while Qwest provides the voice service to the end-user.	Information located on Qwest's Wholesale website provides sufficient information for a CLEC to order the Line Sharing/Shared Loop. Supporting technical references are contained in Technical Publication 77406 (June 2001).
Line Splitting	Provides a CLEC with the opportunity to offer advanced data service simultaneously with an existing Unbundled Network Elements Platform (UNE-P) in conjunction with POTS, by using the frequency range above the voice band on the copper loop. The advanced data service may be provided by a CLEC, a DLEC, or another service provider chosen by the CLEC.	Qwest Wholesale website provides sufficient information for a CLEC to order Line Splitting. Supporting technical references are contained in Technical Publication 77406 (June 2001).

Exhibit 3-9 – Functionality Test Performance Measures

PID	PID Definition	PID Description	Comparison	Findings
GA-1	Gateway Availability-IMA-GUI (Minutes)	Measures availability of IMA-GUI and reports the percentage of Scheduled Up Time the IMA interface is available for view and/or order processing.	Comparison of Pseudo-CLEC and Qwest ad hoc not possible.	Several outages counted towards GA-1 under Qwest's interpretation of the "outage" definition. AZIWO1198 issued and closed. Procedures for documenting gateway outages in compliance with PID.
GA-2	Gateway Availability-IMA-EDI (Minutes)	Measures availability of the EDI interface, and reports the percentage of scheduled time the EDI interface is available.		No Qwest-caused gateway outages for the IMA-EDI interface observed by Pseudo-CLEC
PO-1	Preorder/Order Response Times	Measures timeliness of responses to specific preordering/ordering queries for CLECs via specified gateway interfaces. (Measurement of pre-order transactions affects time for creating an LSR and therefore CLEC productivity.)	Comparison of Pseudo-CLEC and Qwest ad hoc not possible.	Calculated in Capacity Test. Qwest system met benchmark standard.
PO-1A-9	Response Time for Connecting Facility Assignment submitted via IMA-GUI			Impasse as to measures used for EDI as "actuals" as distinct from IRTM. Resolution of impasse required that Qwest to establish measurement capabilities for these transactions by December 2002. A decision will subsequently be made as to which measurement to use.
PO-1B-9	Response Time for Connecting Facility Assignment submitted via IMA-EDI			
PO-1A-10	Response Time for Meet Point Inquiry submitted via IMA-GUI			
PO-1B-10	Response Time for Meet Point Inquiry submitted via IMA-EDI			
PO-2A-1	Electronic Flow-through for LSRs Received Via IMA-GUI (Percent)	Measures the percentage of electronically submitted LSRs that flow from the electronic gateway interface to the SOP without falling out for manual intervention. Flow-through rates are highly dependent on the training and expertise of the CLECs.	Comparison of Pseudo-CLEC and Qwest ad hoc data produced identical results.	Diagnostic. (No performance standards available for this measure.)
PO-2A-2	Electronic Flow-through for LSRs Received Via IMA-EDI (Percent)			Diagnostic.

PO-2B-1	Electronic Flow-through for All Eligible LSRs Received Via IMA-GUI (Percent)			Diagnostic. Percent of eligible LSRs that flow through subject of AZIWO2113. Impasse issue, resolve by acceptance of Qwest proposal for continued improvement at regular six months intervals, and understanding that PO-2B is not be included in the PAP at this time.
PO-2B-2	Electronic Flow-through for All Eligible LSRs Received Via IMA-EDI (Percent)			
PO-3	LSR rejection notice interval (Hours or Seconds)	Measures the interval between the receipt of a LSR to a rejection notification. Disaggregation includes rejected LSRs submitted electronically and returned manually; rejected LSRs submitted and returned electronically; and rejected LSRs submitted and returned manually. The benchmark standards are 12 hours for manual rejects via IMA and EDI, 18 seconds for automated rejects via IMA and EDI, and 24 hours for fully manual rejects.	Comparison of Pseudo-CLEC and Qwest ad hoc data produced virtually identical results	AZIWO1108 issued and closed. Qwest providing CLECs with timely Rejection Notices.
PO-4	LSRs Rejected	PO-4 measures the percentage of LSRs submitted that are rejected for standard categories of errors/reasons. Disaggregation includes LSRs electronically received/manually returned, electronically received/electronically returned by interface type, and manually submitted/manually returned LSRs.	AZIWO1210 issued and closed. Comparison of Pseudo-CLEC and Qwest ad hoc data produced virtually identical results.	AZIWO2114 issued and closed. No performance standards available for this measure. Reported for diagnostic purposes only.

PO-5A-1	FOCs on time for fully electronic LSRs Received via IMA-GUI (Percent)	Measures the percentage of FOCs received within the standard interval. The standard for fully electronic FOCs (PO-5A) is 20 minutes. The standard for electronically submitted and manually returned FOCs (PO-5B) is 24-72 hours depending on the product. The standard interval for fully manual FOCs (PO-5C) is 24 hours plus the standard interval in PO-5B. The standard interval for failed flow-through FOCs (PO-5E) is six hours.	Comparison of Pseudo-CLEC and Qwest ad hoc data produced virtually identical results.	Fully electronic FOCs via IMA GUI for Pseudo-CLEC and aggregate CLECs both meet benchmarks for all product types. Confirmed in retest.
PO-5A-2	FOCs on time for fully electronic LSRs Received via IMA-EDI (Percent)			AZIWO2108 issued and closed. Fully electronic FOCs via EDI for Pseudo-CLEC and aggregate CLECs meet benchmarks for all product types. Confirmed in retest.
PO-5B-1	FOCs on time for electronically submitted and manually returned LSRs via IMA-GUI (Percent)			Results for electronic/manual FOCs via IMA GUI indicate that the Pseudo-CLEC and aggregate CLECs both met the benchmark for all product types. Confirmed in retest.
PO-5B-2	FOCs on time for electronically submitted and manually returned LSRs via IMA-EDI (Percent)			AZIWO2108 and AZIWO2126 issued and closed. System and process improvements to FOC processes made with respect to Centrex and Complex Resale products. Commercial CLECs did not order sufficient volumes of these products to test Qwest's FOC timeliness. Pseudo-CLEC Resale LSRs submitted electronically via IMA/EDI and processed manually exceeded a 90 percent benchmark. Pseudo-CLEC and aggregate CLECs each meet the benchmark for Unbundled Loop Aggregate. Confirmed in retest.
PO-5C	FOCs on time for fully manual LSRs (Percent)			No Pseudo-CLEC data available for fully manual FOCs. Aggregate CLEC results failed to meet the 90 percent benchmark for LNP. CGE&Y issued AZIWO2126. During retest, 22 out of 23 LNP LSRs (95.65%) submitted by commercial CLECs via fax, received a FOC on time. AZIWO2126 closed. Commercial CLEC resale and Unbundled Loop Aggregate results exceeded benchmark.
PO-5E-1	FOCs on for failed flow-through LSRs via IMA-GUI (Percent)			Pseudo-CLEC and aggregate CLECs met the established benchmark for all products (for which data was available). Confirmed in retest.
PO-5E-2	FOCs on for failed flow-through LSRs via IMA-EDI (Percent)			AZIWO2126 issued and closed. Pseudo-CLEC and aggregate CLEC results for Unbundled Loop met the established 6-hour benchmark. Aggregate CLEC results missed the 6-hour benchmark for LNP. During retest, average FOC interval for the LNP LSRs submitted by commercial CLECs was reduced to one hour..

PO-6A	Completion Notification - IMA	Measures average interval from the time an order is posted "as complete" in WFA to the time electronic notification is transmitted to the CLEC.	AZIWO1216 issued and closed.	Resolution of impasse establishes a 6-business hour benchmark for Work Completion notification, with recommendation that Qwest continue to make process improvements and seek to further improve this benchmark. (At test inception no performance standards were available for this measure.)
PO-6B	Completion Notification - GUI			
PO-7	Completion Notification Intervals (Percentage)	Measures the percentage of billing completion notifications that are transmitted to the CLEC within four business days of posting in SOP.	Comparison of Pseudo-CLEC and Qwest ad hoc data produced identical results.	Pseudo-CLEC and commercial CLEC results for both IMA and EDI interfaces demonstrate parity with Qwest retail results.
PO-8	Jeopardy Notice Interval	Measures the average time that the customer is first notified that an order is in jeopardy to the original due date for the order. Disaggregation is based on product type. The standard for comparison is parity with Qwest retail results – which are not disaggregated by product type.	AZIWO1220 issued and closed. Comparison of Pseudo-CLEC and Qwest ad hoc data produced virtually identical results.	AZIWO2109 issued and closed. For non-designed services, aggregate CLEC jeopardy intervals were significantly shorter than intervals for Qwest's retail customers. Based upon aggregate CLEC results, CLECs received jeopardy notification intervals in parity with Qwest retail operations. Recalculated performance results based on the findings of AZIWO1220
PO-9	Timely Jeopardy Notices (Percent)	Measures orders for which advance jeopardy notification was provided versus orders that missed the original due date. Disaggregation is based on product type. The standard of comparison is parity with Qwest retail results.	AZIWO2130 issued and closed.	AZIWO2109 and AZIWO2111 issued and closed. Pseudo-CLEC results for non-designed services receiving a timely jeopardy notification in parity with Qwest retail results. However, aggregate CLEC results showed significant disparity with retail results. Percentage of jeopardy notifications received by CLECs in advance of the due date at parity with retail for Unbundled Loop and Number Portability. Low number of observations for UNE-P precludes jeopardy determinations. Commercial CLECs not experiencing sufficient missed due dates for UNE-P orders to evaluate jeopardy timeliness. Empirical evidence indicates CLECs not being competitively harmed by late UNE-P jeopardy notices. Recalculated performance results based on the findings of AZIWO2130.

OP-3A	Installation Commitments Met – Dispatches within MSA	Measures the percentage of installations that are completed by scheduled due date. Disaggregation includes dispatches within MSAs, dispatches outside MSAs, and no dispatches. Designed services disaggregated by dispatches within "Interval Zone One" and dispatches within "Interval Zone Two." Standard of comparison is parity with Qwest retail results, except for unbundled 2 wire analog loops, measured against a 90 percent benchmark.	AZIWO2130 issued and closed.	AZIWO2110 issued and closed. Pseudo-CLEC results for Business installation commitments met were in parity with Qwest retail results. During a retest period, Qwest met dispatched Residential installation commitments. When considered with commercial CLEC results, which are in parity, and Pseudo-CLEC residential installation results outside an MSA, Qwest meets dispatched residential installation commitments at acceptable levels. Pseudo-CLEC results for UNE-P installation commitments met were in parity with Qwest retail results. Commercial CLEC results for Centrex 21 installations were in parity with Qwest retail results. No data available ISDN BRS and PBX.
OP-3B	Installation Commitments Met – Dispatches outside MSA			Qwest is providing CLECs with parity service for dispatched residential installation appointments met outside a MSA. Commercial CLEC results for dispatched business orders outside MSAs indicated a lower rate of on-time commitments (54%) than Retail (90%).
OP-3C	Installation Commitments Met – No Dispatches			AZIWO2110 issued and closed. Pseudo-CLEC results demonstrate that rate at which Qwest met scheduled installation appointments for Business, ISDN BRS and UNE-P orders is in parity with Retail. Commercial CLEC results determined to be in parity for these products where sufficient data were available. While Pseudo-CLEC Residential orders were provisioned on-time at a lower rate than retail Residential orders, commercial CLEC results were in parity with Qwest retail. Disparity for Pseudo-CLEC residential results was subject of AZIWO2110. Determined that Qwest meets over 97 percent of installation commitments for the Pseudo-CLEC and 99 percent for commercial CLECs. During retest, Qwest met all 30 non-dispatched Residential installation commitments. Therefore,, Qwest deemed to meet residential installation commitments for CLECs at acceptable level. Commercial CLEC results demonstrate on-time provisioning parity for non-dispatched Centrex 21 orders.

OP-3D	Installation Commitments Met – Interval Zone One			AZIWO2110 issued and closed. Qwest met installation commitments for ISDN BRS orders in Interval Zone One at acceptable levels. The 90 percent benchmark for unbundled 2-wire analog loops was met for the Pseudo-CLEC and aggregate CLECs. High levels of service for the Pseudo-CLEC and aggregate CLECs were achieved, meeting 100 percent of appointments for commercial CLECs (although the number of appointments were small.) A high level of service for all other products indicated for both Pseudo-CLEC and aggregate CLECs (100 percent of appointments met for the Pseudo-CLEC and commercial CLECs), but statistically significant determinations not possible.
OP-3E	Installation Commitments Met – Interval Zone Two			Qwest provisioned Pseudo-CLEC DS0 orders on-time in Interval Zone Two at a rate in parity with Retail results.
OP-4A	Installation Interval – Dispatches within MSA (Average Days)	Measure reports the average time to install service. Disaggregation same as for Installation Commitments Met. Standard of comparison is parity with Qwest retail results, except for unbundled 2 wire analog loops, measured against 6-day benchmark.	AZIWO1217 issued and closed.	AZIWO2110 issued and closed. Qwest provides CLECs with dispatched business installations at near-parity levels. Parity achieved for residential and UNE-P orders for both the Pseudo-CLEC and commercial CLECs. Commercial CLEC results indicate provisioning intervals in parity with retail for Centrex 21.
OP-4B	Installation Interval – Dispatches outside MSA			AWIWO2107 issued and closed. Pseudo-CLEC provisioning intervals were in parity with Qwest retail (the only product with sufficient data). Aggregate CLEC results were in parity for residential orders. Initially, Qwest failed to achieve parity service for business orders requiring a dispatch outside an MSA. Commercial CLEC results were assessed for all dispatched business orders during the retest period, which demonstrated parity for dispatched business installation intervals.

OP-4C	Installation Interval – No Dispatches			AZIWO2104 and AZIWO2100 issued and closed. Pseudo-CLEC results for business installations requiring no dispatch were in parity with Qwest retail. Qwest failed to provide the Pseudo-CLEC with parity installation intervals for UNE-P installations. However, aggregate CLEC results and Commercial CLEC installations were in parity. Pseudo-CLEC and commercial CLEC results were in parity for Residential installations requiring no dispatch. Among non-dispatched orders, Pseudo-CLEC results indicated that Centrex 21, ISDN BRS, and PBX provisioning intervals were significantly longer than for Qwest retail. Of these products, Qwest failed to provide commercial CLECs with parity installation intervals for Centrex 21, the only product with sufficient data. Basic Rate ISDN orders, both Pseudo-CLEC and commercial CLEC provisioning intervals were more than twice as long as Retail, with a significant and substantial disparity determination made for the Pseudo-CLEC retest data. This confirms the disparity finding during the Functionality Test.
OP-4D	Installation Interval – Interval Zone One			AZIWO2100 issued and closed. Unbundled 2 Wire Analog results (the only disaggregation with more than ten observations), met the established six-day benchmark for the Pseudo-CLEC and aggregate CLECs. Qwest failed to provide parity installation intervals for ISDN BRS for the Pseudo-CLEC and aggregate CLECs in Interval Zone One. A similar situation was found for ISDN BRS in Interval Zone Two. A single retest of ISDN BRS in Interval Zone One indicated parity in service to the Pseudo-CLEC.
OP-4E	Installation Interval – Interval Zone 2			Pseudo-CLEC results for DS-0 indicated that Qwest provided better service to the Pseudo-CLEC than to its own retail customers. A significant disparity was found for ISDN BRS in Interval Zone One. No ISDN BRS lines in Interval Zone Two were re-tested. (see OP-4D).
OP-5	New Service Installation Quality	Measures percentage of new order installations that were trouble free within the first 30 calendar days following installation. Measure is reported for all products installed during the reporting	Comparison of Pseudo-CLEC and Qwest ad hoc data produced identical results.	AZIWO2131 issued and closed. Pseudo-CLEC results were in parity for all products where sufficient data were available. Aggregate CLEC results were in parity for all products except Megabit (based on only three observations). Aggregate CLEC results for Unbundled Loop ADSL were indeterminate, indicating probable disparity. Future commercial results to determine resolution of Unbundled Loop ADSL issues.

		period. The standard of comparison is parity with Qwest retail results.		
OP-6A-1	Delayed Days For Non-Facility Reasons – Dispatches Within MSAs (Average Days)	Measures average number of days service installation is delayed beyond the scheduled due date. Considered for non-facility and facility reasons separately. Limited data available due to high rates of appointments met by Qwest. Only products provided are those with missed due dates. Standard of comparison for this measure is parity with Qwest retail results.	AZIWO2130 issued and closed. Performance results based on findings of AZIWO2130.	AZIWO2123 issued and closed. Data insufficient to make determination for Pseudo-CLEC, but indicates probable parity for Business and UNE-P. Aggregate CLEC data demonstrated parity for residential orders. Data for business orders indicates that commercial CLECs were experiencing nominal one-day longer installation delays than retail customers.
OP-6A-2	Delayed Days For Non-Facility Reasons – Dispatches Outside MSAs (Average Days)			The Pseudo-CLEC did not experience any delays for dispatches outside MSAs. CLECs did not experience any dispatched Business Services installations outside MSAs. However, commercial CLEC data indicated that CLECs experienced longer installation delays than Qwest's retail customers.
OP-6A-3	Delayed Days For Non-Facility Reasons – No Dispatches (Average Days)			Pseudo-CLEC data quantities insufficient, but limited results indicate that Qwest met Pseudo-CLEC due dates. In instances where due dates were missed, the delay intervals were as short as for Qwest retail. Aggregate CLEC results supports findings with intervals significantly shorter than Qwest retail for residential and business installations.
OP-6A-4	Delayed Days For Non-Facility Reasons – Interval Zone One			Qwest did not miss any appointments for the Pseudo-CLEC in Interval Zone One. Qwest is providing commercial CLECs with parity service for unbundled 2-wire analog.
OP-6B-1	Delayed Days For Facility Reasons – Dispatches Within MSAs			Aggregate CLEC results demonstrated parity for Business and Residential delayed days among dispatched orders within MSAs.
OP-6B-2	Delayed Days For Facility Reasons – Dispatches Outside MSAs (Average Days)			Data were insufficient to make determinations for Residential installations, the only product with data available. Limited results for aggregate CLECs, however, indicate probable parity.
OP-6B-3	Delayed Days For Facility Reasons – No Dispatches (Average Days)			Results demonstrate that commercial CLECs receive parity service for delayed days for non-dispatched residential orders. Qwest did not miss any commitments to the Pseudo-CLEC when a dispatch was not required.

OP-6B-4	Delayed Days For Facility Reasons – Interval Zone One			Results for unbundled 2-wire analog indicated parity between aggregate CLECs and Qwest (despite limited number of occurrences).
OP-6B-5	Delayed Days For Facility Reasons – Interval Zone Two			Data insufficient for parity determination.
OP-7	Coordinated "Hot Cut" Interval (Hours: Minutes)	Measures the average time to complete coordinated "hot cuts" of unbundled loops beginning with the "lift" time and ending with Qwest's loop test.	Comparison of Pseudo-CLEC and Qwest ad hoc data unavailable.	Diagnostic measure with no established standard. No performance standards available.
OP-13A	Coordinated Cuts on Time (Percent)	Measures the percentage of coordinated cuts completed within one hour of the scheduled due time. The benchmark for this measure is 90 percent within an hour. OP-13B reports the percentage of coordinated cuts started without CLEC approval.	Comparison of Pseudo-CLEC and Qwest ad hoc data produced identical results.	All of the Pseudo-CLEC coordinated cuts were completed on time, exceeding 90 percent benchmark.
OP-13B	Coordinated Cuts Started Without CLEC Approval (Percent)			Diagnostic measure with no established standard. No performance standards available.
MR-3A	Out Of Service Cleared Within 24 Hours – Dispatches Within MSAs (Percent)	Measures percentage of out of service trouble reports cleared within 24 hours of receipt of trouble report. Disaggregation is based on dispatch status and areas described in provisioning measures. Standard of comparison is parity with Qwest retail results.	Comparison of Pseudo-CLEC and Qwest ad hoc data produced identical results for non-designed services. AZIWO1219 issued and closed for designed services.	Pseudo-CLEC results insufficient for determinations; however, aggregate commercial CLEC results demonstrate that parity service was provided for clearing out-of-service business and residential troubles. Pseudo-CLEC UNE-P data and aggregate CLEC results insufficient were indeterminate due to small number of UNE-P repair tickets available. With the similarity of performance for troubles within an MSA and outside an MSA, it was deemed appropriate to combine all Pseudo-CLEC and commercial CLEC dispatched UNE-P trouble tickets, regardless of geographical location, for purpose of comparison with the appropriate retail result. Results indicate a combined CLEC result of 86.79% cleared within 24 hours (46/53) as compared to a retail result of 87.58%, a statistically significant finding of parity. Results indicate parity for UNE-P out of service conditions when aggregated for all CLECs and all dispatches.

MR-3B	Out Of Service Cleared Within 24 Hours – Dispatches Outside MSAs (Percent)			Insufficient Pseudo-CLEC data for dispatches outside MSAs. Aggregate CLEC results demonstrate parity service was provided in clearing out of service Business and Residential troubles involving dispatches outside MSAs within 24 hours. Pseudo-CLEC UNE-P data and aggregate CLEC results insufficient were indeterminate due to small number of UNE-P repair tickets available. With the similarity of performance for troubles within an MSA and outside an MSA, it was deemed appropriate to combine all Pseudo-CLEC and commercial CLEC dispatched UNE-P trouble tickets, regardless of geographical location, for purpose of comparison with the appropriate retail result. Results indicate a combined CLEC result of 86.79% cleared within 24 hours (46/53) as compared to a retail result of 87.58%, a statistically significant finding of parity. Results indicate parity for UNE-P out of service conditions when aggregated for all CLECs and all dispatches.
MR-3C	Out Of Service Cleared Within 24 Hours – No Dispatches			AZIWO1190 issued and closed. UNE-P only disaggregation with sufficient data for Pseudo-CLEC data within strata. Results showed failure of Qwest to provide Pseudo-CLEC parity service. (Qwest failed to clear 3 out of 15 out of service conditions within 24 hours). Disparity was addressed in AZIWO1190. Use of aggregate CLEC UNE-P results within strata was indeterminate. UNE-P troubles for aggregate CLECs including other strata indicated parity. Surmised that Qwest's performance is acceptable, based on use of commercial results to draw conclusions. Recommended as performance measure, going forward. Results for the aggregate CLECs demonstrated parity service for the Business and Residential strata.
MR-3D	Out Of Service Cleared Within 24 Hours – Interval Zone One			Commercial CLECs received better service than retail.
MR-3E	Out Of Service Cleared Within 24 Hours – Interval Zone Two			Insufficient data for finding.

MR-4A	All Troubles Cleared Within 48 Hours – Dispatches Within MSAs (Percent)	Measures percentage of both service affecting and out of service trouble reports cleared within 48 hours of receipt of the trouble report. Disaggregation is based on dispatch status and areas described in provisioning measures. Standard of comparison is parity with Qwest retail results.	Comparison of Pseudo-CLEC and Qwest ad hoc data produced identical results for non-designed services. AZIWO1219 issued and closed for designed services.	All troubles cleared within 48 hours for the Pseudo-CLEC. Aggregate CLECs also experienced very high rates of cleared troubles, meeting the parity standard for Business and Residential. Due to small number of UNE-P repair tickets available and similarity of performance for those troubles within an MSA and outside an MSA, deemed appropriate to combine all Pseudo-CLEC and commercial CLEC dispatched UNE-P trouble tickets regardless of the geographical location. Results indicated combined CLEC result of 96.77% (60/62) cleared within 24 hours as compared to the retail result of 96.75%, a statistically significant finding of parity.
MR-4B	All Troubles Cleared Within 48 Hours – Dispatches Outside MSAs			Parity demonstrated for commercial CLECs for Residential troubles. All Business troubles cleared within 48 hours (although no statistical finding was obtainable). Analysis indicates Qwest provides parity service for business and residential troubles and for UNE-P troubles.
MR-4C	All Troubles Cleared Within 48 Hours – No Dispatches			All Pseudo-CLEC troubles cleared within 48 hours for all disaggregation; however, insufficient data to make definitive assessment. Commercial CLEC results indicate parity with Qwest retail for Business and Residential troubles. For UNE-P, Pseudo-CLEC and commercial CLEC troubles all cleared within 48 hours. Aggregated data insufficient for definitive UNE-P assessment. Since all CLEC troubles were cleared, service level deemed "acceptable."
MR-4D	All Troubles Cleared Within 48 Hours – Interval Zone One			All Pseudo-CLEC troubles cleared within 48 hours in Interval Zone One. Commercial CLEC results exceeded that which Qwest provides its retail customers. Determined that Qwest provides parity service for Unbundled 2-Wire Analog.
MR-4E	All Troubles Cleared Within 48 Hours – Interval Zone Two			Insufficient for statistical finding.

MR-5A	All troubles cleared Within 4 hours – Interval Zone One	Measures percentage of trouble reports cleared within four hours of receipt of trouble ticket for designed services. Reported by whether service is located within Interval Zone One or Interval Zone Two. Standard of comparison is parity with Qwest retail results.	Comparison of Pseudo-CLEC and Qwest ad hoc data produced identical results for non-designed services. AZIWO1219 issued and closed for designed services.	All Pseudo-CLEC Unbundled 2-Wire Analog troubles cleared within four hours in Interval Zone One, demonstrating parity service. Aggregate CLEC results in parity for Unbundled 2-Wire Analog.
MR-5B	All troubles cleared Within 4 hours – Interval Zone Two			Only one trouble for commercial CLECs reported in Interval Zone Two during six-month test period. Trouble cleared within 4 hours. "Parity" finding would be unreliable based on only one observation. However, when results of are considered together with results for Interval Zone One (MR-5A), evidence is that Qwest is clearing troubles within 4 hours regardless of zone designation. Thus determination of parity is warranted.
MR-6A	Mean Time to Restore – Dispatches Within MSAs (Hours: Minutes)	Measures average time to restore services. Disaggregation is based on dispatch status and areas described in provisioning measures. Standard of comparison is parity with Qwest retail results.	Comparison of Pseudo-CLEC and Qwest ad hoc data produced identical results for non-designed services. AZIWO1219 issued and closed for designed services.	Based on commercial CLEC data, Qwest provides parity time to restore for business and residential troubles. For UNE-P troubles, commercial CLEC results were initially indeterminate, leaning towards disparity. During the retest period, dispatched commercial CLEC UNE-P restorals had a lower average interval than the retail average, resulting in a determination of parity.
MR-6B	Mean Time to Restore – Dispatches Outside MSAs			In all cases, CLEC average restoration intervals were shorter than Qwest retail intervals. Based on commercial CLEC data, Qwest provides parity. Results for business and UNE-P troubles were indeterminate, but inferred parity.
MR-6C	Mean Time to Restore – No Dispatches			AZIWO1191 issued and closed UNE-P results revealed a disparity between the Pseudo-CLEC and Qwest retail. Aggregate CLEC results were indeterminate but leaning towards disparity for UNE-P. Commercial results were analyzed for the retest period. Results indicated that the mean time to restore commercial CLEC UNE-P lines were in parity with Qwest retail. For business and residential troubles, aggregate commercial CLEC restoral intervals were demonstrated to be in parity with retail.

MR-6D	Mean Time to Restore – Interval Zone One			Pseudo-CLEC and aggregate CLEC restoral intervals were significantly shorter than Qwest retail intervals for Unbundled 2-Wire Analog troubles. Qwest provides CLECs with for Unbundled 2-Wire Analog.
MR-6E	Mean Time to Restore – Interval Zone Two			Insufficient for parity conclusions.
MR-7A	Repair Repeat Report Rate – Dispatches Within MSAs (Percent)	Measures percentage of trouble reports repeated within 30 days. Disaggregation based on dispatch status and areas described in provisioning measures. Standard of comparison is parity with Qwest retail results. Impasse issue resolved with benchmark for line sharing disaggregation set at parity with Qwest DSL service.	Comparison of Pseudo-CLEC and Qwest ad hoc data produced identical results for non-designed and designed services.	Pseudo-CLEC results were in parity or leaning towards parity for repair repeat report rate for all products. Commercial CLEC results were in parity for all products. Qwest provides parity for business, residential, and UNE-P.
MR-7B	Repair Repeat Report Rate – Dispatches Outside MSAs			Commercial CLEC residential trouble reports demonstrated to be in parity with retail. Commercial CLEC results were indeterminate leaning towards parity for business troubles. There were insufficient data for any parity determination for UNE-P troubles. Analysis indicates that Qwest provides parity for business and residential troubles requiring a dispatch outside an MSA.
MR-7C	Repair Repeat Report Rate – No Dispatches			Pseudo-CLEC UNE-P and commercial CLEC business and residential repeat rates demonstrated parity with Qwest retail. When UNE-P Pseudo-CLEC and aggregate CLEC results were combined, comparison with retail indicated parity.
MR-7D	Repair Repeat Report Rate – Interval Zone One			Both Pseudo-CLEC and aggregate CLEC Unbundled 2-Wire Analog Loop trouble repeat rates were demonstrated to be in parity with Qwest retail..
MR-7E	Repair Repeat Report Rate – Interval Zone Two			Insufficient data for parity conclusions.
MR-8	Trouble Rate	Measures trouble reports as a percentage of total installed lines for product group. Standard of comparison is parity with Qwest retail results.	Comparison of Pseudo-CLEC and Qwest ad hoc data unavailable.	Pseudo-CLEC results were in parity for all product disaggregation where data were available. Similarly, aggregate CLEC results were in parity for all product disaggregation.

MR-9A	Repair Appointment Met – Dispatches Within MSAs (Percent)	Measures percentage of appointment dates and times for repair reports met. Disaggregation based on dispatch status and MSA. Standard of comparison is parity with Qwest retail results.	AZIWO1218 issued and closed. Comparison of Pseudo-CLEC and Qwest ad hoc data produced virtually identical results.	AZIWO2125 issued and closed. Qwest failed to provide the Pseudo-CLEC and commercial CLECs with parity service for UNE-P repair appointments met. Commercial CLEC results were in parity for UNE-P repair appointments during the retest. Aggregate CLEC results for business and residential repair appointments met were demonstrated to be in parity with Qwest retail.
MR-9B	Repair Appointment Met – Dispatches Outside MSAs			Aggregate CLEC residential results were in parity with Qwest retail. Commercial CLEC results were indeterminate leaning towards parity. Pseudo-CLEC UNE-P results were indeterminate leaning towards disparity. Commercial CLEC data for dispatched UNE-P repair appointments met were insufficient for a parity determination.
MR-9C	Repair Appointment Met – No Dispatches			AZIWO2125 issued and closed. Pseudo-CLEC results for UNE-P revealed a disparity versus Qwest retail. However, commercial CLEC results were in parity for UNE-P repair appointments during a retest. Aggregate CLEC results demonstrated parity for business and residential troubles. Analysis indicates Qwest is providing CLECs with parity levels for business and residential troubles.
MR-10	Customer And Non-Qwest Related Trouble Reports	Measures percentage of trouble reports that were customer related.	Comparison of Pseudo-CLEC and Qwest ad hoc data unavailable.	Diagnostic measure included for informational purposes only.
BI-1	Time To Provide Recorded Usage Records	Measures average time interval from the date of recorded daily usage to the date usage records are transmitted to the CLEC. Measure is reported for UNE and resale usage combined. Standard for comparison is parity against Qwest retail results.	Comparison of Pseudo-CLEC and Qwest ad hoc data produced virtually identical results.	Pseudo-CLEC and commercial CLEC results demonstrated parity with Qwest retail results. Qwest provided CLECs with UNE and resale usage records in half the time it provided to its own retail operations.
BI-2	Invoice Delivered Within 10 Days	Measures percentage of invoices delivered to CLEC within 10 days of the bill date. Reported for UNE and resale usage combined. Standard for comparison is parity against	AZIWO1211 issued and closed. Pseudo-CLEC and Qwest ad hoc data producing	AZIWO1211 issue and closed. Pseudo-CLEC and commercial CLEC results for UNE and resale were in parity with Qwest retail results. However, data reconciliation of Qwest ad hoc and Pseudo-CLEC collected data, determined that Qwest's BI-2 ad hoc data were not correctly reflecting the time to provide standard electronic bills. The reconciliation proved that Pseudo-CLEC

		Qwest retail results.	virtually identical results.	February electronic CRIS bills were not delivered within 10 days of the bill date as described in the Qwest ad hoc BI-2 data; rather, they were delivered in July. Pseudo-CLEC performance results for BI-2 were recalculated reflecting actual bill received date for the invoices associated with the February electronic CRIS bills. Qwest has implemented a fix, and this problem has not reoccurred. Qwest is providing industry standard electronic bills within 10 days of the bill date in parity with Qwest retail results.
BI-3	Billing Accuracy-Adjustments For Errors	Measures percentage of billed revenue that is billed correctly on bills rendered during the reporting period. Measure is reported for UNE and resale usage combined. Standard is parity against Qwest retail results.	Most recent comparison of Pseudo-CLEC and Qwest ad hoc data produced virtually identical results.	Pseudo-CLEC and commercial CLEC results demonstrated parity for billing accuracy with Qwest retail results for UNE and resale.
BI-4	Billing Completeness	Measures percentage of recurring and non-recurring charges associated with complete service orders that appear on the correct bill (next available bill). Measure is reported for UNE and resale usage combined. Standard is parity against Qwest retail results.	AZIWO1214 issued and closed. Most recent comparison of Pseudo-CLEC and Qwest ad hoc data produced virtually identical results.	AZIWO1214 issued and closed. Pseudo-CLEC and commercial CLEC results for UNE and resale bill completeness demonstrated parity with Qwest retail results. However, Qwest's BI-4 ad hoc data was not correctly reflecting percentage of recurring and non-recurring charges associated with complete service orders that appear on the correct bill (next available bill). The reconciliation proved that additional orders were not being billed on the next available bill that reported in Qwest ad hoc data. Qwest acknowledged it was not calculating the measure appropriately and instituted corrective measures. Historical data were analyzed and the previously observed problem was corrected. Established that future commercial results can be relied on to evaluate performance for this measurement

Exhibit 4-1 - Retail Parity Evaluation Success Criteria

- Pseudo-CLEC Service Representative had assurance that an order, once released with an eligible service type, "flowed through," similar to the assurance the Qwest Service Representative had.
- Time and effort to perform pre-order queries were substantially the same for Pseudo-CLEC and Qwest Service Representatives.
- The level of pre-order to order integration was substantially the same for Pseudo-CLEC and Qwest Service Representatives.
- Data on screens presented to the Pseudo-CLEC Service Representative were "sufficiently equivalent" to the data presented to the Qwest Service Representative.
- Equal facilities were available for the Qwest Service Representative and the Pseudo-CLEC Service Representative for service to be installed in the same serving area.
- The procedure used to reserve large blocks of TNs was equivalent for both a Pseudo-CLEC Service Representative and a Qwest Service Representative.
- Services installed in the same serving area had reasonably similar due date intervals experienced by the Qwest Service Representative and the Pseudo-CLEC Service Representative.
- An equal opportunity was provided to the Pseudo-CLEC Service Representative and the Qwest Service Representative to expedite due dates.
- The procedure to obtain and/or reserve a "vanity" telephone number (TN) was equivalent for both a Pseudo-CLEC Service Representative and a Qwest Service Representative.
- The ability to make a change on a pending order was equal for both a Pseudo-CLEC Service Representative and for a Qwest Service Representative.
- An equal ability was provided to both the Pseudo-CLEC Service Representative and the Qwest Service Representative to query status of a pending service order.
- For "working left-in" situations, interconnect mediated access (IMA) provided the Pseudo-CLEC Service Representative with an equivalent amount of status information as was provided to the Qwest Service Representative.
- The hours of system availability were the same for Pseudo-CLEC Service Representatives and for Qwest Service Representatives. (The determination factored in the purposes for which the interfaces were up and available within Qwest.)

Exhibit 4-2 – Qualitative Results of Retail Parity Evaluation

- No unasked-for changes - No unasked-for changes were experienced regarding an order's original due date, reserved TN or selected features through acceptance by the SOP (retail), and through receipt of a FOC (resale).

- Comparability of time and effort – As anticipated, differences were found in both the timing and the numbers of fields and steps required for the various queries between resale and retail. However, these were deemed to be unavoidable, as they were a natural consequence of additional CLEC-specific information required. However, such differences in timing did not have a material impact on the end-to-end transaction that were entailed. In practical terms, preorder response times were similar for Pseudo-CLEC and Qwest service representatives.

- Pre-order integration - IMA-GUI preorder-to-order integration for POTS allowed Resale Service Representative to retrieve pre-order responses via pull-downs in the "order generation" tabs, whereas retail systems do not separate pre-order and order functionality for POTS service requests. While this does not provide full parity for pre-order-to-order integration, the functionality allows creation of a resale order without re-keying the pre-order data.

- Complex Services - For complex services the reverse situation for POTs is true. The retail systems require multiple entries to be made in various systems. By contrast, IMA-GUI enabled resale pre-order responses to be retrieved via pull-downs in "order generation" tabs. Neither retail nor resale complex services are flow-through eligible. Counter-intuitively, complex POTS-type services required an average of 15% manual entries for resale, compared with 80% manual entries for retail. A CENTREX example indicated 35% manual entries for resale versus 84% manual entries for retail. On balance, retail systems have some advantages for POTs service, whereas IMA-GUI affords advantages for complex services (as less manual intervention is required in the latter case).

- Data presented on screens - Resale pre-order query response data were substantially the same as retail in content. The format of the responses, due mostly to systems design considerations, were different in most instances. The responses returned were clear, easily interpreted, and specific to the query transaction.

- Facility availability reporting – "Facility Availability" queries were found to produce substantially the same results for the Qwest service representative and the Pseudo-CLEC service representative when conducted during the same timeframe for the same geographic area.

- Reserving large blocks of TNs – A manual procedure was required to reserve large blocks of TNs in the same geographic for both resale and retail. However, resale and retail representatives call different telephone numbers; resale representatives received requested TNs via FAX, while the retail representatives received the TNs during the call. [4]

- Service installation - "Resale Appointment Scheduling" queries were found to produce substantially the same results as retail queries conducted during the same timeframe.

- Expediting due dates - An "Expedite" field is available on the LSR form for the resale representative to indicate that an order needs to be expedited -- but this has to be accompanied by a telephone call to the Interconnection Service Center (ISC). The retail representative must also make an internal phone call to expedite an order. The process to request an expedited due date is substantially the same for the resale representative and the retail representative.

[4] The times ranged from 23 minutes to 1 hour and 10 minutes from the time the call was placed to the Interconnection Service Center until the fax was received.

Exhibit 4-2 – Qualitative Results of Retail Parity Evaluation

- Vanity TN - IMA-GUI does not provide the functionality to request a specific phone number. In this circumstance, the resale representative must call Qwest. The retail system allows the representative to request a specific number, and if that number is not available it will present a list of alternatives. Both retail and resale representatives were accessing the same Telephone & Address GUI system to obtain the vanity TNs. On balance, resale and retail representatives have *substantially* the same ability to obtain and reserve vanity TNs.

- Change pending order - Both the resale and retail systems provide the ability to make a change on a pending order that requires dispatch.

- Query status of impending order - Both the resale and retail systems provide the ability to check the status of an order at any time through order completion. "Status returned" provided clear, concise messages to inform the Pseudo-CLEC what stage tan order was in.[5] Both the resale and retail representatives have substantially the same ability to "status" a pending order. The quality of information that was returned to the resale representative tended to be more clear and concise than the information returned to the retail representative.

- Status of "working left-in" information – Resale "Facility Availability" queries were produced substantially the same results as retail queries conducted during the same timeframe. "Working left-in" lines were properly designated in all cases.

- System availability - Hours of system availability were substantially the same for resale and retail.

- Edit and error checks - Both resale and retail systems provide error checking and responses to indicate the errors. Error messages were generated in IMA-GUI when an LSR error occurred. The error messages captured in screen prints were clear and concise. The error messages advised the resale representative what section and field on the LSR contained the error. Edit and error checking capabilities of IMA-GUI were deemed sufficient for the resale representative to identify and correct any errors on a LSR.

[5] Returned messages included: A FOC has been issued. The Service Request was assigned to a service representative. The Service Request has an error condition. Service Order issued for provisioning.

Exhibit 5-1 – Qualitative Finding on Qwest's System Scalability

- A defined, documented EDI migration path exists for CLECs to develop automated interfaces to connect to Qwest's OSS via the Application Programming Interface. Qwest's electronic interfaces are scalable and support CLEC inter-connectivity to Qwest systems.

- Qwest's WAN network backbone is adequately sized to meet current and projected CLEC usage. Qwest's Network Capacity Planning Group is responsible for monitoring the WAN, projecting future CLEC demand, and planning for network augmentation. Processes and procedures are documented.

- Network access for CLEC dial-in users is sufficient and scalable to support increased network workloads. Qwest's design can scale-up the number of access lines to terminating modems using Cisco equipment.

- Appropriate network protocols for current and projected CLEC transactions are activity utilized for access methods which include mail, e-mail, fax, dial-in, EDI, and private T1 with web GUI. Protocols used are TCP/IP, Fax modem and standard modem protocol.

- Processes for capacity planning and design-in-place are sufficient and effectively executed by Qwest. Its Wholesale Interconnect Group has a staff of planners that are responsible for automated systems capacity planning. Qwest has documented processes that support this function and the process is well defined through the IMA System Scalability Process Document/Process Flow Diagram (SSPD/PFD).

- Documented processes and methodologies are in place to analyze the scalability of systems gateways and interfaces. Qwest's Capacity Planning Group is responsible for analyzing the scalability of system gateways and interfaces. Processes and methodologies are included in the IMA SSPD/PF.

- Redundant sites exist for use in processing CLEC orders. Thornton, Arizona and Denver, Colorado are primary data centers for processing of CLEC orders, with the Omaha, Nebraska Data Center responsible for back up. The changeover to redundant servers is transparent to the co-provider in the case of hardware failure.

- OSS and gateway interfaces adequately scale to support projected capacity growth and are responsive to accommodate unexpected CLEC growth. Gateways scale through use of modular components. Qwest's Load and Performance Group certifies that the OSS and gateway interfaces will adequately support projected volume. The IMA SSPD/PF provides supporting documentation for certification.

- The amount of disk storage per server is actively monitored and managed. Qwest's Capacity and Planning Group is responsible for management of disk storage space. Qwest monitors each server with set parameters and paging for alarms.

- Thresholds for acquiring additional disk storage are sufficient to accommodate unexpected CLEC growth. Qwest has dynamic storage systems (databases) which are connected to enterprise shared storage systems. Logging systems with more than 100GB of storage also are linked to enterprise-shared storage.

Exhibit 5-1 – Qualitative Finding on Qwest's System Scalability

- Qwest has an established disaster recovery planning process. Qwest's Technical, Policy, Standards and Processes Group ensure that all applications are properly planned and documented in accordance with a regional standard. Every application is incorporated in a control document before going into production. Qwest tracks all information concerning the implementation of the application to be able to re-create the application in the case of a disaster.

- Qwest does not conduct actual disaster recovery tests to verify their procedures, nor is the disaster recovery process periodically tested to assess Qwest's ability to recover from a disaster. However, Qwest did implement periodic walk-throughs to ensure that changes are updated (such as contacts, software, infrastructure, etc).

- Tape backup procedures are in place and actively utilized along with archival procedures to secure backups. Qwest provides backup for their systems using an IBM product known as ADSM. A UNIX process (Daemon) running locally on each box accomplishes the backup.

- Qwest has an established methodology for maintaining CLEC processing levels. The Interconnect Response Time Measurement (IRTM) tool monitors pre-order response times. Any upward trend of response times is investigated.

- Qwest has procedures in place to monitor every aspect of performance and report to its CLEC customers. One such mechanism is through its Performance Indicator Definitions (PIDs) which provides monthly results on 47 areas of performance. If a negative impact on processing levels is detected, the Capacity Planning Group investigates and if necessary, begins planning a relief project.

- Qwest has an established methodology for monitoring the ability to scale on a daily and monthly basis. Monitoring is effective in implementing solutions that provide sufficient service levels to CLECs via The Capacity Planning System (CPS) provides forecasts by quarter for three quarters into the future. Activity for daily and hourly "spikes" is also monitored. Data are collected to ensure that Qwest operates within the limits of its forecast. If actual volumes appear to be exceeding the forecast, corrective steps are taken accordingly.

- Qwest has a process to monitor transaction response times. "Success ratios" are frequently reviewed to identify opportunities to improve system performance. Qwest's project team that is responsible for implementing the IRTM tool for monitoring response times, reviews results and detects trends in response intervals and failure rates. Upward trends in response times or "timeouts" are investigated for potential corrective action.

- Qwest has established an automated process for obtaining performance data and gauging future growth patterns. Data are collected and published on the Qwest Planning website. Histograms are developed to project future growth trends.

- Performance data are gathered for forecasting of system growth necessary to accommodate CLECs. The Capacity Planning Group collects more than 75 data points every 10 minutes and stores those data for 45 days in an Oracle system known as RDBMS. After 45 days, the data are "rolled up" to hourly averages for historical perspectives and forecasting. Forecasts developed by the Key Business Indicators Group are contrasted with actual business functions and the CPS utilization forecast. Systems upgrades are performed months before thresholds are realized.

- Capacity planning procedures are continually evolving and documentation is constantly updated to meet new business needs (per IMA SSPD/PF).

Exhibit 5-1 – Qualitative Finding on Qwest's System Scalability

- Capacity planning processes are designed to provide an "acceptable level of quality" determined by specific pass/fail criteria given to the Load and Performance Team.

- There is an established process for the development of the Capacity Planning function's scalability analysis. Reference to this is located in the IMA Scalability Process Document.

- There is an established process for budgeting funds and resources in the support of capacity planning. The Capacity Planning and Provisioning Organization is responsible for annual budget forecasting and assessing the need for additional resources. Input with regard to wholesale systems is provided by the IT department, which is responsible for monitoring system capacity and utilization.

- Scalability monitoring and planning is accounted for in Capacity Planning. Qwest has procedures and processes in place to determine what must be done to increase capacity in the case of unforeseen volume changes and the lead-time required for providing this additional capacity. Qwest monitors actual utilization to determine if forecasted volumes are sufficient to meet actual demand. Performance levels are also monitored to ascertain that performance does not deteriorate with increased demand. The associated processes and procedures for supporting scalability are contained within Qwest's IMA SSPD/PF.

- Qwest actively monitors systems growth and performs needs analysis. The Midrange Capacity Planning Performance Design Group collects data at 10-minute intervals for over 1,400 midrange servers. This data is utilized to monitor system loads detect relief project triggers. These are implemented prior to capacity exhaust predicated on forecasted growth. This process is contained within the IMA SSPD/PF.

- Performance monitoring software is installed and used at all site locations. HP's ITO Measureware Perfview (system name for Performance View) and Glance (Glance Plus Pack) software is used at each site location to monitor performance.

- Systems performance is appropriately monitored. Qwest's IT group is responsible for monitoring the critical components of each system (e.g., CPU, disk utilization, etc.) for performance and notifying CIS-Capacity Planning & Provisioning organization when performance drops to levels requiring reinforcement.

- Systems databases are accounted for in the capacity planning process. Qwest's database community uses multiple diagnostic tools and is standardized on BMC's patrol for performance monitoring. This is documented and available in Qwest's IMA SSPD/PF.

- Capacity planning methodology documentation is maintained and updated, and is available to the staff that support the capacity planning process. Qwest maintains the CIS Capacity Planning and Provisioning web site to facilitate capacity planning and systems monitoring. All documentation concerning capacity planning is placed on this internal web site and updated on a regular basis. In addition, Qwest's TPSP web site also maintains technical, policy, standards and process documentation, which is available to all staff responsible for capacity planning support.

Exhibit 5-2 - Qwest Staff Scalability Findings

- Qwest has the means of temporarily increasing staff for large-scale projects outside of the normal workflow environment. Qwest has provisions for outsourcing to vendors in Dallas, TX and Sierra Vista, AZ for short term or long term duration. Qwest certifies that its vendor's are able to provide staff support at a high level of competency. Outsourcing in this manner obviates certain training issues and improves response times, as contrasted with hiring staff to support short-term volume peaks.

- Qwest has an adequate "emergency overflow" staff. Personnel orientation and training times are appropriate and meets requirements for rapid adjustments in the event of unexpected CLEC volume increases. Qwest provides OSS center support through multiple channels to accommodate high increases in volume of short duration. Support is provided through non-affected centers and outsourcing.

- A "risk management" plan is in place to address the means of handling the loss of key personnel, and to cover contingencies for personnel increases to support unexpected CLEC growth. Qwest maintains insurance coverage on key management personnel, as reflected in Qwest's Disaster Recovery Process.

- The number and timing of shifts for each workday are consistent with the workload. Workforce scheduling is determined through monitoring and maintaining histories of the workload. Qwest balances the workload through "workload management" processes, outsource "partnering," employee overtime' and use of temporary employees. This can accommodate sudden or gradual increases in volumes over time.

- Physical limitations for future and temporary staffing (e.g., office space and equipment) are addressed in Qwest's scalability planning. When current forecasts signal an exhaust of current office space, Qwest's Real Estate Department -- which keeps track of all available office space -- is alerted and prepares a plan to convert existing space to meet staff requirements. For temporary staffing, Qwest uses outsourced facilities.

- Training of the staff is performed as an ongoing process. Qwest maintains an internal training web site, which provides a training path for each job title. Each manager is responsible for ensuring that employee-training profiles are kept up to date, and employees are scheduled for additional training as appropriate.

- All staff job functions and descriptions are clearly documented. Qwest's web site contains a list of all management and non-management positions within Qwest. A job description detailing each position's responsibility and function is included, along with the skills and qualifications required for performing the job.

- Qwest's Interconnection Service Center/Account Maintenance Service Center (ISC/AMSC) workforce model procedures and methodology are documented and adhered to by management and staff. This is documented in the Wholesale CLEC Forecast/Projections, used to support product planning and allocate network interconnection operations personnel.

- Qwest can scale its workforce to confirm receipt paper source documents to the CLECs. Personnel are assigned in each center to address this work function; and performance measurements exist to evaluate Qwest's responsiveness.

- Qwest can scale its workforce to provide sufficient personnel for collecting and distributing CLEC faxes. Specific personnel in each work center are assigned this particular task and their performance is rated by the timeliness in which these faxes are distributed to the appropriate personnel.

Exhibit 5-2 - Qwest Staff Scalability Findings

- Qwest is capable of scaling its workforce to manage and handle fall-out exception processing. This is done through normal office requirements with volume contingencies covered through supporting centers and outsourcing.

- Qwest is capable of scaling its workforce to provide staff that is adequate to support call center CLEC information requirements. Qwest monitors call center response times for CLEC support functions in order to determine whether adequate staffing exists to handle calls in a timely fashion and handle CLEC information requirements.

- Qwest is capable of scaling its workforce to provide sufficient personnel for performing data entry through CLEC access systems for manual orders. Qwest personnel do not use the CLEC access system to input manual orders, but input these orders as they would for any retail service order. These orders are subjected to the same performance measures as those electronically processed; the time the fax is received is used in determining whether Qwest meets its commitment for processing the order. Qwest actively monitors time delays in the input of these orders and takes appropriate action to increase its work force either on a permanent or temporary basis as needed.

- There is an established process for forecasting expected growth of CLEC business as well as adjusting to unexpected growth. Qwest maintains a mechanized forecasting process that is used to assist Qwest in determining personnel requirements. This allows the ISC to determine reasonable expectations of future staffing requirements in advance, as documented in "Wholesale CLEC Forecasting/Projections." Unexpected growth is identified by comparison of existing volumes with forecasted volumes.

- Qwest has an established process for reviewing workload forecasts to determine validity and accuracy. Comparisons of current workloads to projected workloads are provided, as provided in Wholesale CLEC Forecasting/Projections. In accordance with this documentation, Qwest determines the number of employees required for completing certain tasks and maintains a forecast for expected level of activity. This forecast provides a basis for gauging the number of employees required for covering the expected workload. Once the forecast is prepared, current volume is compared to the forecast and adjustments to personnel are determined accordingly.

Exhibit 6-1 – Relationship Management Evaluation Phases

Test Phase	Activities	Entrance Criteria	Exit Criteria
CLEC Account Establishment	Activities performed in conducting the CLEC Account Establishment Evaluation included: gathering Qwest's CLEC Account Establishment documentation; review and evaluation of account establishment and maintenance documentation provided by the Pseudo-CLEC; Conducting Qwest, Pseudo-CLEC, and CLEC personnel interviews; and documenting observations. These activities encompassed: • Gathering Documentation - The Qwest CLEC Account Establishment documentation was retrieved from the Qwest web site or otherwise as provided by Qwest. The TA gathered the necessary documentation through network access and by means of contacts with Qwest. • Reviewing and Evaluating Documentation - This review evaluated the overall policies and practices for establishing and maintaining the account relationship. The Pseudo-CLEC kept records of its account establishment experiences. The TA reviewed and evaluated that documentation and compared it to documented Qwest processes. • Performing Interviews - The TA conducted interviews with the Pseudo-CLEC, participating CLEC's and Qwest personnel and documented the experiences encountered when establishing a new CLEC account. • Documenting Observations - All observations were documented and reported in the Relationship Management summary report.	CLEC Account Establishment and Maintenance documentation available; a standard Interconnection Agreement Template provided; Customer Questionnaire Template was prepared; access to Qwest, Pseudo-CLEC, and CLEC personnel available; Pseudo-CLEC Interconnection Agreement in place; Pseudo-CLEC Customer Questionnaire provided; Evaluation Criteria and Checklist in place; and Interview Questionnaire provided.	Checklists and questionnaires completed; results of observations documented; summary report prepared, including an Inventory of Documentation
CLEC Account Management	Gathering Qwest CLEC Help Desk, Forecasting, Communications, and other Account Management Process Documentation; reviewing and evaluating the account documentation provided by Qwest; conducting Qwest, Pseudo-CLEC, and CLEC personnel interviews; documenting observations. These activities encompassed: • Gather Documentation - Qwest CLEC Help Desk, Forecasting, Communications, and other Account Management Process documentation retrieved from the Qwest web site or otherwise provided by Qwest. The TA gathered the documentation through network access and through contacts with Qwest. • Review and Evaluate Documentation – Evaluation of Qwest processes and practices in managing the CLEC account relationship. The TA reviewed and evaluated the clarity and sufficiency of Qwest's Process documentation. The ultimate evaluation was based on many factors, one of which was the documentation. • Conduct Interviews - TA conduct of interviews with the Pseudo-CLEC, participating CLEC's and Qwest personnel to document the experiences encountered with regards to	CLEC Help Desk, Forecasting, Communications, and other Account Management Process documentation available. Access to Qwest, Pseudo-CLEC, and CLEC personnel provided Evaluation Criteria and Checklist in place Interview Questionnaire available	Completion of checklists and questionnaires; documentation on results of observations; and preparation of summary report including an inventory of documentation.

	responses to account inquiries, Help Desk call processing, Help Desk call closures, Help Desk status tracking, problem escalation, forecasting, and communications ➢ Document Observations - All observations documented and reported in the Relationship Management summary report.		
CLEC Training Evaluation	Gathering Qwest published training documentation; reviewing and evaluating training documentation provided to the Pseudo-CLEC; and documentation of observations of training classes. These activities encompassed: ➢ Gathering Documentation - The Qwest training schedules and associated documentation were retrieved from the Qwest web site or otherwise provided by Qwest. The TA performed the gathering of the documentation through network access and through contacts with Qwest. ➢ Reviewing and Evaluating Documentation - Pseudo-CLEC providing records of its Qwest training. The TA reviewed and evaluated that documentation and compared it to the Qwest documentation. Interviews were conducted with Pseudo-CLEC personnel to determine the comprehensiveness of the training that was received. ➢ Documenting Observations - All observations were documented and reported in the Relationship Management summary report.	Training schedules provided; published syllabuses and handbooks available; evaluation criteria and checklist prepared; interview questionnaire available; training of Pseudo-CLEC documented.	Completion of checklists and questionnaires; documentation on results of evaluation of training information provided by Qwest; and documentation of all findings and results in the Relationship Management Summary report
Interface Development Evaluation	Gathering of documentation; reviewing and evaluating documentation; monitoring and evaluating Qwest's processes and procedures supporting CLEC interface development (EDI) and implementation (EDI and IMA) efforts; attending Qwest/CLEC or Qwest/Pseudo-CLEC interface technical meetings; documenting observations; and determining whether Qwest provided the CLECs adequate access to testing facilities that enabled CLECs to implement the EDI interface. These encompassed: • Gathering Documentation - Qwest EDI Interface Process and EDI development related documentation was retrieved from the web site or provided by Qwest. IMA Implementation Process and associated implementation documentation was retrieved. The TA performed the gathering of the documentation through network access and through contacts with Qwest. • Reviewing and Evaluating Documentation - Qwest Interface Development Process documentation was reviewed and evaluated by the Pseudo-CLEC and TA. Observations of the Pseudo CLEC were documented and included in a Summary Report. The focus was on the clarity, completeness and sufficiency of the information Qwest made available to CLECs for developing EDI and installing the IMA OSS interfaces. • Monitoring and Evaluating Qwest's Processes Supporting CLEC Interface Development - Monitoring of processes was conducted at Qwest facilities, CLEC facilities, and Pseudo-	Qwest's documented Development processes and Technical Documentation for EDI development and IMA Installation/ Configuration; preparation of evaluation criteria and checklist; and availability of interview Questionnaire	Completion of checklists and questionnaire; documentation of results of evaluations and observations; and preparations of summary report

	CLEC facilities. The TA observed the processes for design and development of the EDI interface and the processes for design, development testing and implementing an IMA GUI Interface to the Qwest OSS. The TA conducted interviews with Qwest, the Pseudo-CLEC, and CLEC personnel. A cooperative process was followed to identify, discuss, and track OSS interface development and implementation activities in progress. Monitoring and evaluation addressed the criteria that: ▪ Qwest processes, timing and communications governing the development of an EDI interface to Qwest's OSS or implementing a Qwest IMA GUI interface to the Qwest were carried out in accordance with the Qwest processes and procedures were published and available to the CLECs. ▪ The terms and definitions utilized in the EDI development and IMA GUI implementation documentation were published and were available to the CLECs. ▪ The CLECs and the Pseudo-CLEC obtained documentation relating to building an interface and/or configuring service to the Qwest EDI and IMA GUI interfaces. The documentation was clear, accurate, and sufficient to build the interface. ▪ Meetings to discuss interface development were reasonably scheduled and attended by Qwest subject matter experts. ▪ Attending EDI Interface Development Meetings - After receiving Qwest and CLEC or Pseudo-CLEC permission, the TA attended EDI Interface Development meetings to gather information and evaluate Qwest's relationship with the parties involved in the CLEC EDI Development process. ▪ Documenting Observations - All observations were documented and reported in the Relationship Management summary report.		

Exhibit 6-2 - CLEC Account Establishment

- Qwest's Product Catalog (PCAT) details information for initial CLEC contacts to begin the account establishment process (interconnection negotiation, account management assignment, etc.) for both facilities-based CLECs and resellers. The PCAT details a 5-step process for facilities-based CLECs and a 12-step process for resellers. Collateral information obtained from Qwest's account management personnel was well constructed and easy to follow. "Getting Started Guides" are kept current, and contain a number of hyperlinks to web pages of interest and necessity.

- There is a clear delineation of the responsibilities of the CLEC-Qwest business relationship. The PCAT details the roles and responsibilities of the respective parties. Step-by-step instructions inform the facilities-based CLECs and resellers where to obtain the information needed, including Qwest contacts.

- Escalation processes are cited in the startup documentation. The PCAT provides escalation criteria and instructions in the section titled "Expedites and Expectations Overview," Links are provided to other pages where contact numbers can be found. A link is also provided to the Service Interval Guide for "expedites" or escalations on service orders.

- The role of Qwest in the process is described. Work activities required for billing IXCs for jointly provided switch access are clearly outlined. Detailed information on "Meet Point Billing" processes, along with applicable regulations and guidelines are provided in the PCAT.

- Responses anticipated from each type of pre-order query are clearly outlined in startup documentation and associated URLs. These include a "Preordering Overview," and the "Preorder" section of the IMA 8.01 User Guide.

- Steps for processing various types of orders are provided. Available URLs include: Ordering steps for the various types of products available to CLECs; Qwest "home pages" for Facilities-Based CLECs and Resellers respectively -- containing drop-down menus to navigate to a product description for each product; "Ordering Overview" containing Qwest's ordering processes; Qwest's Local Service Ordering Guidelines (LSOG); and Order section of the IMA 8.01 User Guide.

- A list of "Reject Reasons" in the "Ordering Overview" of the PCAT, in which all reasons for rejects are identified and thoroughly explained. The IMA User Guide contains an Appendix with common error messages.

- Expectations on service intervals for resale and interconnection services are delineated in the Qwest Service Interval Guide, which is updated on a regular basis.

- The types of customized bills available for CLEC use are enumerated. The PCAT also contains a comprehensive discussion of all available billing formats and their applications.

- Tariff pricing information is made available to CLECs. The PCAT provides contact lists (by state) to use to gather tariff information and contains links to both a Qwest Tariff Library (sorted by state) and a Qwest Tariff activity bulletin board (viewable by date or jurisdiction (state)). The PCAT also provides a Universal Service Order Code (USOC) Search and Field Identifier (FID) "Finder" that enables interactive searching of available USOCs and FIDs.

- Explanations are provided as to how to report troubles, create trouble tickets, obtain status on troubles, escalate and close trouble tickets. Repair center contact numbers to report troubles are included. Information required by the repair center in reporting repair issues and for creation of trouble tickets is incorporated

- The process for treating misdirected repair calls -- when a CLEC end user mistakenly calls Qwest for a repair – is delineated. (The end user is given the CLEC's repair number -- to the extent that Qwest has an updated list of CLEC repair numbers).

- Repair contact telephone numbers for each major type of service are provided. These include appropriate contacts for the full complement of services utilized by CLECs. The contact repair matrix encompasses: Resale – Simple Residence (IFR); Resale – Simple Business (IFB); Resale – Complex POTS; Resale (Designed Services); Unbundled Loop; Unbundled Switch; LIS Trunking; Unbundled Transport; and Number Portability.

- The impact of customers switching from Qwest to a CLEC on the Line Information Data Base (LIDB) are clearly explained. Qwest documentation explains how a new CLEC can arrange a LIDB storage data contract with Qwest (should this option be pursued), and provides Account Manager contacts to obtain information regarding the contract. Documentation also addresses LIDB implications with regard to Calling Cards, Collect Calling, Bill-to-Third Number Calling, and Fraud monitoring.

- Media for receiving billing outputs and reports are clearly defined and accurate. Available media types include: CRIS Summary Bill, IABS Summary Bill, IABS Sub Account Bill Detail, Daily Usage Feed, Loss Report, and Completion Report.

- Processes are delineated that enable the CLEC to escalate issues in the event Qwest does not respond appropriately to CLEC needs. The PCAT describes a formal complaint process that CLECs may follow in the event that a complaint or issue has not been resolved by Qwest to the satisfaction of the CLECs.

- Documentation available to CLECs provides tax exemption information and cites CLEC responsibility to claim such exemptions. The PCAT provides descriptions of forms to be submitted to Qwest for both federal and state exemptions.

- Qwest documentation provides a clear explanation of the interfaces available to the CLEC for OSS functions. The PCAT describes CLEC options for interfacing with Qwest OSS. The options include: "Fax" and IMA for pre-order, order and post-order activities; and CEMR and EB-TA for maintenance and repair. Electronic connection options available to CLECs are dial-up, direct connection via a dedicated circuit, and web access

- URLs are updated to reflect the most current information, and contain forms for CLECs to request access to the various Qwest interfaces.

- The PCAT provides instructions for gaining OSS access; available data files; and connectivity options. Methods for ordering are clearly explained, and timeframes are listed for each type of access options. Required forms are outlined and provided for submission to the Account Manager.

- Qwest's SS7 certification requirements are enumerated. The PCAT provides the worksheets for CLECs to establish compliance and compatibility with network standards. The worksheets provide criteria that the CLEC switch must meet for SS7 certification.

- Documentation clearly identifies Qwest "Directory Listing" options available to CLECs, including features and functionality that are available to CLEC customers. The PCAT explains CLECs responsibilities to its customers' in this regard.

- Processes for CLECs to request new services are described. The discussion is clear and delineates required steps required and response timeframes. The PCAT contains New Services Request Application forms for the CLECs to submit.

- Information and rules for the handling changes to the Primary Interexchange Carrier/Local Primary Interexchange Carrier (PIC/LPIC) are provided. Only PIC/LPIC changes initiated by the CLEC on behalf of the end-user are processed. (Qwest rejects any PIC/LPIC changes by Interexchange Carriers (IXCs) on CLEC accounts.)

- Information for accommodating customer CLEC-to-CLEC changes is provided. The PCAT apprises the CLEC of its responsibility for obtaining all information needed to process a disconnect order and re-establish service on behalf of the end user. Documentation also provides instructions for the CLEC to follow for dispute resolution (e.g., slamming).

- Information on products available for Resale is provided. The PCAT was continuously improved during the course of the RPE, and all outstanding IWOs regarding the Product documentation were closed.

- Information describing Qwest's Performance Measurement System is provided. The Arizona PID is published and available to interested parties. The Statement of General Terms and Conditions (SGAT) provides monthly service performance reporting requirements.

- Information describing Qwest change management process (CMP) is provided. The CMP website provides a comprehensive explanation of the CMP process (continuing to evolve during the course of the CMP Redesign negotiations).

Exhibit 6-3 – Action Items and Issues Addressed by Qwest's Pseudo-CLEC Account Manager
Page 1 of 1

- Amendment to Interconnect Agreement for LNP Managed Cuts
- Amendment to Interconnection Agreement
- APOTs
- Billing Cycles
- Billing Dataset Names
- Billing Dispute Resolution Process
- Billing Escalation
- Billing Interface Questions
- Bills For [Pseudo-CLEC]
- Blocks of Telephone Numbers
- Capacity Test
- CMP (Change Management Process)
- CLEC Process Status
- Connectivity Guidelines
- Connectivity/Move Issues
- Contact/Escalation List
- Coordinated Conversions
- Directory Listing Requirements
- Directory Listings
- Documentation
- EB-TA Design Materials
- EB-TA JIA
- EDI Interoperability for UNE-P
- EDI Kick-Off Meeting
- EDI Questionnaire
- EDI/IMA-GUI Conflict
- Facilities Listings Agreement
- Facilities Listings through IMA-GUI
- Facility Listing Ids
- Field Identifiers (FIDs}
- HPC's Readiness for Business
- IMA Dedicated Line Connectivity
- IMA-GUI
- IMA-GUI LSR Cut-off
- IMA Kick-Off
- IMA System Administrator
- Interconnection Proposal
- JIA for EB-TA
- LIS Forecast Forms
- Mailouts e-mail address
- New Customer Questionnaire
- New Customer Questionnaire for Capacity Test
- Posting of CSRs
- Reseller and Facility Ids
- Review Amendment to Interconnect Agreement For LNP Managed Cuts
- SecurID Cards
- SecurID Form
- Set Up Planning Meetings
- Shared Collocation Form
- U S WEST Documentation Issues
- UNE Loss/Completion Reports
- UNE-C
- UNE-P
- UNE-P Amendment
- UNE-P Loss/Completion Reports
- UNE-P Ordering
- UNE-P USOC Issue
- UNE-P/C Questions/Issues
- UNE-P-POTS
- UNE-P-POTS USOCs
- Updated Amendment to Interconnect Agreement
- Vanity Telephone Numbers
- Other Account Manager Issues

Exhibit 6-4 – CLEC Forecasting Requirements

Forecast	Requirements
CLEC Local Interconnection Service (LIS) Trunking Requirements	CLECs are to provide LIS forecasts on a quarterly basis. Qwest's Interoffice Planning organization uses CLEC forecasts, along with the actual usage from the previous reporting period, for planning purposes. A five to six-month lead-time for forecasted capacity additions is sought. Qwest provides CLECs with "Under-Utilization Reports" as to their LIS trunks. Some CLECs agree and disconnect the under-utilized trunks, while others disagree and offer extenuating circumstances to keep the trunks in place. There is a process within Qwest to unilaterally "reclaim" under-utilized trunks. As well as a process for CLECs to requesting "un-forecasted" LIS trunks, which may or may not be honored, depending on availability of facilities.
Qwest Central Office Modifications	Schedules for upgrades of Central Office equipment are posted on the Qwest web site.
Wholesale Products	Forecast trends are derived from actual order volumes received by Qwest. Observations of Qwest's subject matter experts, regulatory analysts, marketing professionals, and legal counsel are factored into the forecasting process. Final forecasts are provided to IT systems, operations, and network planning to enable these organizations to plan and scale their activities accordingly.
Colocation Space and Power Planning	Provisions for colocation testing are in Interconnection Agreements.[6] Space is provided on a first-come, first-served basis. Qwest publishes a collocation "Space Bulletin" on a monthly basis. Forecasts are submitted semi-annually by the CLECs. Requests for augmentation of virtual collocations are referred to the Central Office Engineering Manager. Space and Power Engineers evaluate requests (OK, deny, offer alternative). Qwest's State Interconnection Manager coordinates site visits for CLECs that dispute denial of space.

[6] Collocation applications and augmentation applications are available on the Qwest web site.

Exhibit 6-5 –Training Courses Available to CLECs
Page 1 of 1

Title	Duration	Start Date	City
Access Service Request (ASR) LIS Trunking	1 day	4/24/01 5/24/01 6/21/01 6/28/01	Minneapolis Salt Lake City Seattle Denver
ASR Private Line	1 day	4/25/01 5/23/01 6/20/01 6/27/01	Minneapolis Salt Lake City Seattle Denver
ASR Switched Access	1 day	4/26/01 5/22/01 6/19/01 6/26/01	Minneapolis Salt Lake City Seattle Denver
ASR Wireless Customers	2 days	5/17/01 5/30/01	Seattle Denver
Centrex	2 days	5/23/01	Minneapolis
Interconnect Mediated Access (IMA) "Hands On"	1 day	4/23/01 4/24/01 5/22/01 5/23/01 6/07/01 6/19/01	Denver Denver Denver Denver Denver Denver
IMA "Classic"	1 day	6/05/01 6/12/01	Seattle Minneapolis
IMA Directory Listing	1 1/2 days	5/08/01 6/20/01	Minneapolis Denver
IMA Release 7.0	3 hours	4/06/01 4/10/01 4/17/01	Denver Audio Conference Audio Conference
Local Number Portability	1/2 day	4/27/01 6/15/01	Denver Denver
POTS Product Overview	1 day	6/27/01	Denver
POTS Resale	1 day	3/21/01 6/28/01	Denver Denver
Qwest 101	3 days	6/5/01	Denver
Unbundled Loops	2 days	4/25/01 6/13/01	Denver Denver
Unbundled Network Element - Platform POTS	1 day	4/20/01 6/29/01	Denver Denver

Exhibit 6-6 - Qwest's Training Program Evaluation

- There is a process for obtaining CLEC "training needs" input. The process is clearly written and has been adequately communicated to the CLECs. CLECs can make requests at any time to their account management teams for different types of training, additional training, or enhancements to existing training.

- Qwest training available to CLECs adequately addresses CLEC needs for product training. Qwest offers a full compliment of product-specific courses (commencing in February 2001). Feedback from CLECs has been very positive. It is anticipated that these courses will be streamlined and focused over time.

- Qwest's training program balances the needs of new and experienced users of the IMA-GUI. The training is aimed at the inexperienced user, while instructors have flexibility to address a variety of topics not in the curriculum.

- Qwest provides adequate means for CLEC feedback on the training experience and processes for evaluating CLEC feedback, which are properly documented. Course evaluation forms are distributed at the end of each class, asking students to rate the course, instructor, material, environment, and equipment, and provide any other feedback on the course that students wish. There form is also provided on Qwest's website.

- Training schedules and documentation are readily available. Training schedules are provided on a web page that can be accessed from the "Wholesale Training" home page. Training documentation is available on a separate web page (that can be accessed from the Wholesale Training home page).

- Training documentation was found to be clearly written, easily understood, and comprehensive. Student aids included the IMA Training Guide/Class Companion, the IMA User Guide, and the IMA Administrator's Guide.

- The frequency of training is adequate. Classes on most subjects are given at least once per month. More popular classes, such as the IMA "Hands-On" class, are given several times per month.

- Training information is timely and up-to-date. Classes on new products are developed in concert with product availability. Classes for new releases of IMA are held prior to the release, although such classes are not "hands-on."

- Training is provided at reasonable cost to CLECs. Regularly scheduled training held at Qwest locations is free. (If CLECs chose to send personnel from out of the area, the associated cost would include airfare, lodging and meals for all travelers paid for by the CLECs.) When CLECs require that Qwest provide classes at a CLEC site, the CLEC must pay for one or two instructors to fly to the site, and pay for lodging if applicable.

- Instructor contact names and numbers were provided (via business cards) during the training class in the event of the need for follow-up questions. Answers provided by instructors were direct and complete. Significant effort did not have to be expended to answer questions. [7]

- Qwest has a structured method for evaluating instructor performance. CLECs evaluate instructors and are provided with "Instructor Evaluation" forms at the conclusion of each class. CLECs are also free to submit evaluations to Qwest through their Account Management team.

- Pseudo-CLEC personnel received IMA-GUI "Hands-On" training that was deemed effective in preparing them to use the IMA-GUI interface. [8]

---

[7] Instructors often wrote down all questions they were not able to answer, and researched the answers on breaks and after the class. The instructors were not completely familiar with all of the courses they were required to teach, so they consulted with product subject matter experts in order to fully answer students' questions. This situation would be ameliorated with time as instructors gain increased proficiency.

[8] Pseudo-CLEC personnel also attended the IMA "Classic" which was not a hands-on course. The class was deemed appropriate for users not requiring an in-depth IMA-GUI class, such as supervisory personnel.

Exhibit 9-1 - Performance Audit Test Scenarios
and Associated Performance Measures

Test Scenarios	Performance Measures	
Retail to Resale Conversions	GA-1	Gateway Availability- IMA-GUI
Resale Changes	GA-2	Gateway Availability- IMA-EDI
Retail to UNE-P Conversions	PO-1	Pre-order/Order response times
UNE-P Changes	PO-2	Electronic Flow-through
	PO-3	LSR rejection notice interval
	PO-4	LSRs Rejected
	PO-5	FOCs on time
	PO-6	Completion Notification
	PO-7	Completion Notification Intervals
	PO-8	Jeopardy Notice Interval
	PO-9	Timely Jeopardy Notices
Resale Installations		All previous measures
UNE-P Installations	OP-3	Installation Commitments Met
	OP-4	Installation Interval
	OP-5	New Service Installation Quality
	OP-6	Delayed Days (average)
UNE-L Conversions		All previous measures
UNE-L Installations	MR-3	Out of service cleared within 24 hours
UNE-L Changes	MR-4	All troubles cleared within 48 hours
Complex Services (DSL, 4-Wire, EELs, etc.)	MR-5	All troubles cleared within 4 hours
M&R Scenarios	MR-6	Mean time to restore
	MR-7	Repair repeat report rate
	MR-8	Trouble rate
	MR-9	Repair appointments met
	MR-10	Customer & Non-Qwest related trouble reports
	BI-1	Time to provide recorded usage records
	BI-2	Invoice delivered within 10 days
	BI-3	Billing accuracy- Adjustments for errors
	BI-4	Billing completeness
Coordinated Conversions		All previous measures
All remaining scenarios	OP-7	Coordinated Cutover Interval UNE
	OP-13	Coordinated Cuts on Time

Exhibit 11-1 - CGE&Y's Final OSS Test Report Recommendations

Item	Description
1.	CGE&Y recommends that independent audits be conducted on all measures, based on a quarterly schedule, to ensure the continued accuracy of Qwest's performance measurement reporting on existing and new products. This recommendation is supported by three IWOs created during the Performance Measurement Audit (AZIWO2056, AZIWO2072, and AZIWO3006).
2.	Qwest should develop a process to seek and receive approval from a CLEC before performing any changes to a CLEC-owned account. Currently, Qwest initiated activities are shown as "Completions" on a Loss and Completion Report, but little detail is provided, causing undue confusion. Implementation of this recommendation may provide an opportunity for Qwest to improve the quality and value of the Loss and Completion Report that Qwest provides to CLECs. Notification to a CLEC indicating that Qwest-initiated changes have been made would potentially facilitate the reconciliation of the Loss and Completion Report. This recommendation was developed to address the issue of late notification of order completion on the Loss and Completion Report, and is discussed further in AZIWO2115. This issue is an appropriate candidate for review by the CMP.
3.	CGE&Y recommends that Qwest explore the inclusion of additional edits of CLEC LSRs, within the Business Process Layer (BPL) of the gateway systems, prior to issuance of a FOC. This recommendation suggests that increased edits in Qwest gateway OSS would likely result in lowered initial LSR rejection rates, improved CLEC order processing, and the reduction of rejects after a FOC. This issue was initially discussed in AZIWO2116, and Qwest has implemented improvements.
4.	CGE&Y recommends that when Qwest introduces a new product or service that could impact a CLEC account, that the appropriate OSS and process changes are communicated to the appropriate Qwest departments or workcenters. This recommendation suggests that Qwest implement process improvements that would result in a more efficient update of system tables and better communication to work centers which would help ensure efficient processing of CLEC orders. This issue is discussed in AZIWO1134, which allows CLECs to take advantage of new and revised product offerings more expeditiously. It is also discussed in AZIWO1127, which refers to software changes that were outside of a scheduled IMA release that were not communicated to the CLECs.
5.	CGE&Y recommends that, through the CMP, Qwest improve the timeliness of record updates from Qwest's provisioning systems to the various downstream OSS in regard to customer conversions wherever such improvements have not already been put in place. Delays in downstream record updates can potentially add additional steps to CLECs' business processes. This recommendation is based on AZIWO2060, which is discussed on page 76 of this report. (The CGE&Y Final OSS Test report)
6.	CGE&Y recommends that the CMP consider the following process improvements: ➢ Qwest provide the CLECs with a complete listing of the services and features on any CLEC-initiated order, as entered in Qwest's Service Order Processor (SOP). This recommendation should apply for any CLEC order type, whether flow-through or non-flow-through. This recap should include information such as USOCs, FIDs, Hunting Sequence, etc. This suggestion calls for the Service and Equipment (S&E) section of the Service Order to be returned to the CLEC as entered in the Qwest SOP. This is currently under evaluation by the CMP. ➢ Explore and develop an automated process that would allow CLECs to view the status of service orders initiated by Qwest on CLEC owned accounts. This recommendation suggests that CLECs be provided with the opportunity to view orders, determine the status of orders, and monitor the progress of those orders through the Qwest OSS so that CLECs can more effectively support the needs of their end users. ➢ Continue to improve the Service Interval Guide (SIG) to provide clearer and more detailed information for CLECs on disconnect intervals, and to make the information easier to locate on the Qwest wholesale website.

Exhibit 11-1 - CGE&Y's Final OSS Test Report Recommendations

Item	Description
7.	CGE&Y recommends that Qwest provide CLECs a 45-calendar day advance notice of final EDI design documentation. This recommendation simply suggests that Qwest conform to the timelines for issuance of EDI design documents, as presented by the CMP Redesign Team. The basis for this recommendation can be found in the Relationship Management Evaluation section of this report (CGE&Y Final OSS Test Report) on page 395, as well as in the CGE&Y report." Qwest Change Management Process Redesign Evaluation, Version 3.0, page 43.
8.	CGE&Y recommends that Qwest update its Wholesale website with clear standards and business rules pertaining to CLECs use of the FOC. These standards/business rules should clearly articulate how a CLEC is to differentiate FOC, Jeopardy notice, Reject notices, and any/all other notifiers. CGE&Y also recommends that Qwest publish standard error-handling information and provide it to CLECs on the wholesale website in a table format. This would include more detailed information on Non-Fatal and Fatal errors, making the wholesale website a more detailed and complete reference point for CLECs. Although the Qwest White Paper " Firm Order Confirmation Evaluation Results," dated August 6,2001 provides guidance, the continued development of reference material to assist the CLECs in distinguishing and preventing errors would benefit all parties. The issue of distinguishing error messages is also discussed in Appendix R of this report, Arizona §271 Performance Indicator Definitions (PID) Data Elements Summary Reports, specifically in the HP Missing Functionality Data Elements Spreadsheet.
9.	CGE&Y recommends that Qwest improve the process for CLECs to reserve large blocks of TNs. The reservation of large blocks of TNs is currently a manual process for CLECs. A process improvement, through mechanization or other means, would be most beneficial to CLECs when servicing business customers. The basis for this recommendation is discussed in the Retail Parity Evaluation section of this report on page 236, and in Data Request 192.

Resale and retail representatives each interfaced with primary Qwest legacy databases to accomplish pre-order queries and order transactions.[1] These databases, listed in Table A-1, include:

Figure A-1 - Databases Incorporating Preorder/Order Functionality For Retail Parity Evaluation

System	Application
Business Operations Support System (BOSS)	CSR generation
Customer Account Retrieval System (CARS)	CSR generation
Loop – or Line – Facility Assignment Control System (LFACS)	Facility information
PREMises Information System (PREMIS)	Address validation, TN assignment, and Primary Interexchange Carrier/Local Primary Interexchange Carrier (PIC/LPIC) information
Trunks Integrated Records Keeping System (TIRKS)	Database of central office and outside plant facilities
Appointment Scheduler	LSR generation
Service Order Processor (SOP)	Scheduling
Service Order Completion (SOC)	LSR Generation

Most of Qwest's legacy systems that handle pre-order and order activity serve all three Qwest regions; Arizona being in the Central Region. As a result, there are generally three database versions. For example, regional versions of PREMis are, PREMIS East, PREMIS Central, and PREMIS West; likewise for the other databases. Exceptions are:

- BOSS, which is only in the Eastern and Central regions.[2]
- The Appointment Scheduler, which is a Qwest-wide system.

In general, Qwest Order Management Centers are responsible for a specific geographic region. A retail service representative in Arizona would access the systems in the Central Region to complete an order (e.g., BOSS Central, PREMIS Central, LFACS Central, etc.).[3] In contrast, all requests for CLEC access to the same systems are funneled through a single, centralized location, regardless of the physical location of the CLEC resale service center. [4]

---

[1] Systems may or may not impact response times, either with or without mediation. For example SOP and SOC access does not impact response times.

[2] The same function is served by CARS for Washington and Oregon only.

[3] There are direct links between these centers and Company-wide databases being accessed.

[4] This is an appropriate architectural decision that in and of itself may impose a minimal disparity in response time.

The RPE involved comparisons of "retail systems" utilized by Qwest's Service Order Representatives, and the following IMA systems utilized by the CLECs: [5]

- IMA – Graphical User Interface (IMA-GUI) - to accommodate smaller CLECs. The IMA-GUI is a proprietary Qwest system, specifically designed for CLEC access to Qwest systems. Qwest established design requirements and the system architecture.

- Electronic Data Interchange (EDI) - used by larger CLECs. EDI is an international standard for the interchange of business data. Qwest defined application data elements and transactions that were unique to its business. It was the responsibility of the CLECs to design their own "front-end systems" to capture information and provide translations to accommodate data elements and transactions defined by Qwest. Once the EDI process accepts CLEC data, input is provided to the same systems used by IMA-GUI and Qwest's own retail systems.

- Electronic Bonding – Trouble Administration (EB-TA) is a system specifically set up between Qwest and CLEC for the performance of M&R functions by the CLECs. The mediation required by Qwest's IMA imposes inherent delays, however (to put matters in perspective) these tend to be minimal relative to overall transaction times. These delays include:

  - Query and Transaction Routing - Legacy system resale interfaces that were designed prior to the 1996 Act do not directly access a particular system or database. As such, IMA entails processing to determine what type of query is being run (e.g., address validation, service availability, CSR) and which CLEC geographic area is involved to route the query to the correct database.[6]

---

[5] These forms of OSS access are classified as "Interconnect Mediated Access" (IMA) because they do not provide a direct link to Qwest's OSS functions; all incoming transactions undergo "mediation processes" upon passing through the Qwest firewall in order to be routed to the appropriate back-end systems.

[6] These functions involve additional Qwest systems, such as Business Process Layer, Data Arbiter, and Fetch 'N Stuff.

- Network and Database Security - Access to IMA is effected through a single CLEC log-in gateway at Qwest's firewall. The Qwest mediation process passes along a "CLEC certificate" to each system or database being accessed, granting authorization. Several such security transactions take place with each query. These transactions are transparent to the user, but impose time delays. Such security transactions protect the CLECs as well as Qwest.

- HTTP Routing - The IMA-GUI system is a web-based system. All transactions are transferred via Qwest's web server and received by the CLEC's web server. There is no equivalent HTTP architecture on the retail side.

Appendix B – Development of Functionality Test Documents

Development of Functionality Test Documents included scenario definition preparation of Test Scripts and formulation of Test cases, as follows:

- Scenario definition, which was the responsibility of the CLECs and Qwest, with limited inputs from the TA.

- Preparation of detailed Test Scripts, with step-by-step instructions for each Test Case (e.g., the number of accounts, types of transactions, and test iterations). Development of Test Scripts was the responsibility of the TA.

- Formulation of Test Cases involving different types and combinations of orders and products within a Scenario. Test Case write-ups incorporated information as to inputs, purpose, expected results, measures, and failure criteria. Scenarios verifying the MLT were included. Development of Test Cases was the responsibility of the TA. Test Cases were submitted to Qwest via prescribed electronic methods, as enumerated in Exhibit B-1, which demonstrates the scope of test coverage and wide-ranging test scenarios encompassed by the FT.

- Performing additional Test Script iterations, as necessary, to increase sample sizes within statistical strata or cells in order to achieve a specified confidence level for statistical validity. Development of such iterations was the responsibility of the TA.

Exhibit B-1 – Functionality Test Coverage and Scenarios

Step	Functionality Test Coverage and Scenarios
Preordering/ Ordering	Pre-order process Scenarios included: Address Validation; Customer Service Record (CSR) Inquiry; Service and Feature Availability; Telephone Number Reservation; Due date assignment (includes order for which dispatch is or is not required); Facility Availability; Loop Qualification; and Reject/failed inquiries
Ordering/ Provisioning	Provisioning process Scenarios included: Receipt and Acknowledgement of LSRs; Reject Processing; Manual or Mechanized Service Order Creation; Receipt of the Firm Order Confirmation (FOC); Service Order Status Query; Processing through the Service Order Processors (SOPs); Completion of the LSRs (Installation of the ordered service or facility); Receipt of the notification for Service Order Completion (SOC); and 911 and DA database updates Scenarios gauged the ability of the Qwest OSS to receive the following order activities as *inbound* transactions: New Account Establishment; Conversion (retail to resale or UNE-P); Change; Suspend/Restore; Disconnect; Supplemental Orders; and Cancellation Orders Scenarios gauged ability of Qwest's OSS to send the following *outbound* transactions: Order Rejection/Error Notification; Order Acknowledgement; Firm Order Confirmation; Jeopardy Notice (or equivalent) ; Service Order Completion Report; Update 911 and DA databases; and Loss notification
Back-End Processing	"Back-end processing" is the ability to establish services and features as requested in LSRs. A "Back-End" FT tested the ability of Qwest's back-end systems to provide CLECs with services and features being requested, and to update databases, including 911 and Directory Assistance. The Service Order Completion notification to the CLEC indicates that provisioning was complete.
Billing	"Billing" is the ability for Qwest to provide accurate, timely, and complete usage data and billing records to CLECs for the services, features, network items, and functions that were ordered and provisioned. Verification of the documented charges involved recurring, non-recurring, usage-sensitive charges, and miscellaneous charges. The primary focus of the Billing segment of the FT was to validate billing systems ability to receive of input in a timely manner and to process bills accurately. Bills generated by both the Integrated Access Billing System (IABS) and Customer Records Information System (CRIS) bills were considered. (Emphasis was primarily on CRIS bills in the billing portion of the FT, as product types billed through IABS were not tested in this construct.) [9] Elements of the billing test included verification that: ➢ "What was ordered" was "what was billed" ➢ Bills provided accurate recurring, non-recurring, and usage-sensitive charges ➢ Rates were applied correctly for each product, service, or element ➢ Taxes and surcharges have been assessed correctly ➢ Discounts and adjustments were performed correctly ➢ Prorated amounts were charged accurately according to the disconnect date ➢ Disconnects were processed and appear accurately on the bill ➢ Daily usage files (DUF) are updated accurately. Data contained in DUF were compared to third-party call logs and Qwest Bills. If discrepancies were determined, they were handled through the IWO process.

[9] Product types billed from IABS were Collocation, Resale Frame Relay, Local Interconnection Service (LIS), Interconnect Port-Local Service, Unbundled Dedicated Interoffice Transport (UDIT), DS1 Message Trunk Ports, and E911 (for facility based CLECs only).

Exhibit B-1 – Functionality Test Coverage and Scenarios

Step	Functionality Test Coverage and Scenarios
Maintenance and Repair (M&R)	"M&R" provided the ability for CLECs to report troubles to Qwest, and to check the status of trouble tickets. Scenarios involving planned M&R activities were developed with emphasis on the "highest-volume" types of troubles. The focus of the M&R FT was evaluation of the electronic trouble request submission (trouble report) process, status (trouble handling), and repair (closing of the ticket). Test Scenarios included: No Dial Tone; Static/Noise on the Line; Cannot Call Out; Cannot Be Called; Cannot Call Long Distance; and Features Not Working. Three-quarters of test cases performed using CEMR with full-time availability (via the Pseudo-CLEC) contrasted with EB-TA application. Categories of troubles included: ➢ Planned (induced) – Involving pre-selected test accounts on which specific reportable troubles were intentionally induced ➢ Unplanned – Any trouble discovered on a test account during the course of the functionality testing. Examples included loss of dial tone on the lines, and problems making long-distance calls from the lines installed during testing To test effectiveness of Qwest's trouble reporting systems, test scripts were created to simulate end-user calling its CLEC to report a trouble condition. During the test, but prior to reports of line trouble, arrangements were made with Qwest Single Point of Contact (SPOC) to artificially induce service-affecting trouble conditions on lines established during the FT. Trouble inducements were performed during testing, rather than before, to ensure that the troubles were not detected and subsequently repaired, through routine systems maintenance. CGE&Y assessed the ability of the Pseudo-CLEC to issue, track and close trouble tickets through Qwest's maintenance interfaces.

Appendix C – Retail Parity Evaluation (RPE) Phases

The participants that conducted the RPE were the same as those in the FT. Qwest had an additional responsibility for executing RPE Test Cases, since pre-order, order, and M&R activities were established for retail customers.

RPE phases of Planning, Preparing and Execution are provided in Exhibit C-1. "Entrance" and "Exit" criteria are shown. Although the phases and required activities for the RPE were similar to those defined for the FT, some phases and activities could be truncated.

- The RPE did not require end-to-end processing for billing purposes. Therefore orders generated for the RPE could be cancelled in SOP systems once the Test Case was complete.

- Time measurements were established only for Test Cases where accurate comparisons could be accomplished.

- The assumptions related to Friendlies, cited in the FT, pertain to the RPE as well.

Qualitative tests compared the amount and quality of information available to Qwest and CLEC Customer Service Representatives in terms of equivalency and accuracy. This included standard IMA-GUI pre-order and ordering functionality, in conjunction with order status, escalations, and obtaining preferential or "vanity" numbers.

The RPE ascertained whether resale and retail representatives were able to retrieve equivalent information from Qwest's OSS. Qualitative pre-order and order transactions were generated for 95 Test Scripts. The data review encompassed address validation, CSR validation, requested TNs, service availability, similar appointment times, facility availability, appointment scheduling, and LSR creation and submission.

Exhibit C-1 - Retail Parity Evaluation Phases

Test Phase	Activities	Entrance Criteria	Exit Criteria
Test Planning	Defining test scope and objectives; defining test management items (jeopardy management, issue management, etc.); defining test participants roles and responsibilities; defining the Test Scenarios; developing the comparison approach for pre-order, order and maintenance scenarios; developing the Test Cases; developing the Test Scripts; establishing the data "approach"; establishing appropriate testing volumes; and determining the appropriate resources to support the test preparation and execution phases.	Identifying test volumes, such as the exact number of Friendlies and test accounts and the total number of activities initiated by the Friendlies within the testing timeframe; identifying test iterations to establish the appropriate number of tests and volumes to ensure statistical soundness; identifying test execution intervals (number of days) to cover multiple billing periods and other constraints such as installation intervals; identifying test participants and the associated roles of each; identifying the Friendlies mix and locations; defining the overall testing environment; and establishing the statistical methodology	Baselined test plan for each participant; baselined Test Scripts are complete; test specifications from the Pseudo-CLEC participants; and defined schedule, including critical path items.
Test Preparation (by Test Administrator)	Developing detailed test monitoring plans; developing detailed project plans; defining OSS environment requirements; finalizing the Test Scenarios, analyzing the test coverage; finalizing the Test Scripts; establishing segregated operating terminals at Qwest; identifying and assigning the Friendlies; and creating the Friendlies test packages	Test Standards written, reviewed and commented on by TAG; scope of the tests finalized and approved by the TAG; and determining available Friendlies	Test plan activities section completed; and test Scripts reviewed by TA.
Test Execution	Pseudo-CLEC and Qwest execute Test Cases according to the scripted Test Cases per the instructions of the monitoring TA representative; document test results, issues, resolution, and status. TA staff, positioned at Pseudo-CLEC and Qwest facilities, observe the input and processing of orders; closely guided execution of the Retail Parity Evaluation Test Scripts in both the Pseudo-CLEC and Qwest facilities; counting and measuring planned data and documenting the results on the Test Scripts; reviewing recorded problems uncovered in the test; and tracking problem resolution and re-testing for final resolution with the consensus of the TAG	Baselined test plans for each participant tested; Scripts for testing for each participant prepared; friendlies ready; confirmed operational readiness and available interfaces and systems required for the testing; executed system and access agreements, including assignment of required sign-on accounts and password; selected appropriate SME staff; established suitable Arizona Performance Measures.	All test Scripts were executed and classified as "pass" according to the plan; and there were no outstanding major problems, as determined and concurred by the third party and the ACC.

Appendix D – Capacity Test (CT) Administration and Implementation

The CT was constructed to accommodate a repeatable, controlled -- usually simulated -- test load. The CT focused on volumes, per se, as distinct from "functionality." Some limited aspects of Qwest's provisioning processes were evaluated. However, the test did not "pass judgement" on the means by which Qwest accommodated capacity requirements. For purposes of the CT, it was assumed that Qwest provisioned CLEC service requests on a par with retail operations.

The TA, with CLEC and Qwest input, determined the parameters involved in conducting the capacity test of the Qwest systems. A balance between "simplicity of testing" and "statistical soundness" of analysis was reached in determining the appropriate test conditions.

Participating CLECs and the Pseudo-CLEC provided input data for executing the CT. The CT was run with clean (error-free) LSRs to ensure that the focus was on transaction volumes, per se, and not functionality. However, a number of "error LSRs" (determined by the TAG with input from the Pseudo-CLEC) were inserted as part of the test. The scaled-up input data were comprised of data that had previously passed through the pre-order and order portions of the FT without error, and was then 'replicated' as necessary by CLEC simulators and the Pseudo-CLEC to provide adequate volumes. [7]

Large volumes of pre-order and order transactions were evaluated, consistent with loads forecasted one year from the CT period. Forecasts were used to determine the appropriate number and mix of accounts, transactions, and test iterations.

- The TA established volumes for this testing effort with input from Qwest and the CLECs, based on historical data and CLEC-provided and Qwest-provided one-year forecasts. Specific hour-by-hour volume profiles were determined by the TA and certified by the participating CLECs.

- A subset of the FT orders was used for the CT. The orders were replicated to provide the required volume and mix. Purchase Order Number (PON), TN, appointment date, name, and address fields were 'parameterized' (i.e., the value of the parameter changed during the course of the test) to realize the volume needs of the test. No Qwest Interconnect Service Center personnel were added solely for the CT.

---

[7] A limited subset of Functionality Test data served as the "input workload" to drive the OSS. This required replication of some transactions to generate the necessary volume of transactions. Data within each replication was modified so as to be "unique" for the purpose of the volume test.

- Factors utilized in test volume determination included: the number of CLEC pre-order queries for each LSR; an estimate of hourly volumes and busy hour loads to the base load; a loading factor for Arizona considering that systems may be utilized for some other or all of Qwest states; and a correction load factor to account for forecast errors.

- The test was conducted in a production environment supplementing existing production loads to arrive at anticipated forecasted volumes. Special conditions, such as future dates on LSRs, were placed on the test transactions so that production processing was not adversely affected. The special conditions also provided an alternative method for identifying test orders for data extraction and test clean-up activities.

The types of activities required in the CT test included: Test Planning, Test Preparation, Test Execution, and Test Analysis and Reporting. CT activities, entrance criteria, and exit criteria required for the CT Planning Phase are described in Exhibit D-1. These activities were tracked in an overall project plan created and maintained by the TA.

Although the CT participants were the same participants as for the FT, the involvement of Qwest in the CTs was limited. The CT schedule of what tests were to done, on which days and times they were scheduled, and the frequency of tests were not be known in advance by Qwest. Scheduling activities and actual schedules for the execution of the CTs were "blind" to Qwest. In contrast, the Pseudo-CLEC played an important role, since its "Transaction Generator" software was essential for generating replicated transactions in accordance with test volume requirements.

Exhibit D-1 - Capacity Test Phases

Test Phase	Activities	Entrance Criteria	Exit Criteria
Test Planning	Defined test participants roles and responsibilities including the Pseudo-CLEC. Defined the Test Scenarios. Established the appropriate testing volumes. Determined the appropriate resources to support the test preparation and execution phases. Defined and validated the test plans; Test Plans included the test environment description, entrance and exit criteria, test execution schedule, and the approach for generating LSRs	Firm understanding of technical basis and objectives of test. Definition and appropriate adjustment of workload mix and volumes. Determination of systems involved in test. Determination of participants. Finalization of success criteria. Determination of the times of day for testing, including times of low system activity and normal business hours	Baselined test plan for each participant; and established specifications for each participant. Defined schedules, including critical path items
Test Preparation (by Test Administrator)	Prepared Test Scripts outlining the input and the definition of expected observations for pre-ordering and ordering. Once Scripts were written, the TA reviewed and approved the Scripts.	Validation and review of test plans for each participant; creation of production test environment; and scheduled date for the testing	Test Scripts for pre-order and order activities validated by the TA. A review session with all participants was required to complete this phase.
Test Execution	Pseudo-CLEC executed of the Test Cases according to the test plans; and captured and recorded all relevant data. Qwest provided performance Measurement calculations based on Capacity Test data	Tested Scripts for the pre-order tests; tested Scripts for the order tests; mechanisms established that verified test results and maintained a permanent record; and performance measures process evaluated by the TA	The Execution Phase was deemed complete when the following conditions were met, as certified by the TA: all test specifications were executed and classified as Passed/Failed according to plan; no outstanding major problems existed, as concurred to by the TA and the ACC; and no unresolved escalated issues existed
Capacity Test Analysis and Reporting	Analysis of executed Test Cases and ensuring that all Test Cases were executed and no major issues are outstanding. Evaluation of the system capacity versus forecasted load. Evaluation of whether systems met expectations of the Performance Measurement criteria. Preparation of a Report for the ACC	Requirement of outcomes recorded in the Test Scripts (i.e., a successful execution).	A review session was required to complete this phase. Completion of the Capacity Test was documented in two reports to the ACC: one from the Pseudo-CLEC, and a second called the TA's Evaluation Report, which included the validated analysis of the participants' reports.

The Relationship Management Evaluation (RME) encompassed examination of documentation, specifications and consultative assistance provided by Qwest to facilitate CLECs development of an EDI interface or installation of an IMA-GUI interface. This included the test environment Qwest makes available to CLECs for pre-testing and qualification of EDI and EB-TA interfaces. Inputs and feedback from Qwest, the CLECs, and the Pseudo-CLEC were considered. The interface development evaluation encompassed:

- Review and evaluation of documentation provided on Qwest's website. [8]
- Observation and evaluation of Qwest's processes and procedures in support of CLEC EDI, EB-TA, and Billing interface development and implementation.
- Review and evaluation of Qwest's cooperative EDI testing procedures and testing environments

Qwest's EDI Development Process incorporated the processes described in Exhibit E-1. As indicated, participants perceived the EDI Development Process to well defined, adequately documented, and well administered. Technical specialists involved were knowledgeable and helpful.

- **Pseudo-CLEC Experience**

  The Pseudo-CLEC participated in EDI Connectivity Testing, evaluated the quality of processes, documentation of specifications, and technical support provided for implementing an IMA-EDI gateway to the Qwest OSS environment. Interoperability test was completed over the course of 35 weeks.

  From the Pseudo-CLEC perspective, the EDI connectivity process described in the Qwest's IMA-EDI Implementation Guidelines provided a comprehensive framework for implementing the IMA-EDI gateway interface. Qwest provided timely and accurate support throughout the course of the EDI Connectivity testing assessment project. The Qwest EDI Connectivity processes and gateway specifications were well documented. Qwest's staff was knowledgeable in the Qwest IMA-EDI methodology and requirements. Qwest adhered to the recommended testing schedule for CLECs.

  Testing issues that prevented the successful completion of a test scenario were documented and submitted as IWOs via the TA. During the validation/testing phase, HP submitted ten IWOs for unresolved IMA-EDI Qwest software errors. HP identified the following process issues while undergoing EDI Certification:

---

[8] http://www.qwest.com/wholesale/ima/edi/index.html and HP's EDI Report

- The Qwest process did not appear to have the flexibility to handle the parallel certification of multiple products. Qwest has since put procedures into place to overcome this deficiency.

- The Qwest Connectivity process did not include a clearly defined protocol or schedule for closing open Change Requests (CRs) associated with scenarios after the completion of the EDI Connectivity process. IWOs were generated and Qwest developed the necessary modifications to resolve the issue.

- Qwest did not provide a test bed for exercising CLEC-side IMA-EDI transaction components. The Pseudo-CLEC was unable to properly exercise test harness developments prior to entering interoperability and certification test phases. Qwest developed a Stand Alone Test Environment (SATE) for use by CLECs during EDI certification. SATE was made available on August 1, 2001.[9]

- There was no clearly defined process for communicating software changes that were implemented outside of the scheduled EDI software point releases (6.0, 6.1, etc.). This was addressed in the context of the SATE.

➢ **Conformance of Qwest's Business Rules to Industry Standards**

Qwest business rules and transaction standards were generally consistent with industry standards. However, some variances between the Qwest standards and industry standards surfaced during EDI Connectivity Testing. The TA compared Qwest's business rules and the standards of the Order and Billing Forum (OBF) of the Alliance for Telecommunications Industry Solutions (ATIS). The OBF rules reviewed are contained in Qwest's Local Service Ordering Guidelines (LSOG), Version 3 (LSOG-3). It is noteworthy that LSOG is a "guideline" and not a regulation or a formalized standard.[10] However, while not legally binding, these standards are the basis upon which all preordering and ordering systems are designed.

- Qwest made numerous modifications to the OBF standards. Fields used by Qwest were generally consistent with LSOG-3, although some Qwest-specific fields were added.
- The majority of differences found between Qwest and LSOG-3 were in the area of field usage; many fields that are "Required" by OBF are either "Optional," "Not Required," or "Forbidden" by Qwest, and vice versa.

---

[9] This is explored in depth in Section 8.0 of this report.
[10] Qwest is not bound to comply with LSOG.

Qwest provided a detailed comparison of Qwest and LSOG-3 to clarify the precise differences between the two.[11] Qwest IMA version 9.0, which is based on LSOG-5 has been reviewed by HP, which verified preorder to order integration. Furthermore, a CSR could be parsed and an LSR automatically populated.

➢ IMA-Graphical User Interface

IMA-Graphical User Interface (GUI) is a web-based application accessed by either dial-up or direct connection. The configuration of the IMA-GUI software is substantially the same for both forms of access:

- The dial-up method requires a modem, phone line, SecurID card, user login, Netscape Navigator 3.01 or newer software. Two logins are required for authentication at Qwest's firewall and to login to the IMA-GUI application. The method is slow, with connection speeds at around 26.4 kHz.
- The direct-connection method requires registration of a network address with Qwest for inclusion in its firewall access table. Installation of a dedicated line connecting CLEC and Qwest networks is required, along with a user login, Netscape Navigator 3.01 or newer software, and the Sun Microsystems JAVA Plug-In 1.2.2. Information is forwarded via Qwest's firewall to the IMA-GUI application, requiring a single login. The direct connection can accommodate T1 speeds (1.2 MHz).

IMA-GUI performance has exceeded expectations, and direct connection response times are competitive with EDI. However, when the Pseudo-CLEC followed the Qwest IMA 7.0 Connection Guide to upgrade the IMA-GUI from version 6.0 to 7.0, it was determined that documented procedures presumed that there was not a previous IMA-GUI installation. It was necessary to "uninstall" version 6.0 and then install version 7.0 software from scratch. Qwest has updated procedures accordingly.

➢ Electronic Bonding Trouble Administration (EB-TA)

The Pseudo-CLEC evaluated Qwest's documentation, technical specifications, and information for CLEC development of an EB-TA interface. The evaluation included a review of all the steps leading up to the completion of a Joint Implementation Agreement (JIA) and the viability of building its own EB-TA interface. The JIA establishes and describes processes for change control, business functions, communication protocol, security, performance, recovery procedures, testing, schedules, and contains twelve appendices.

---

[11] Included in Appendix Q of CGE&Y's Final Report.

Qwest documentation was found to be satisfactory in detailing the process a CLEC is to follow in the development of an EB-TA interface. Documents included: Co-Provider Maintenance and Repair (JIA); Qwest Trouble Report Format Descriptions; Qwest / Mediated Access (MEDIACC) Electronic Bonding Trouble Administration – Loop Maintenance Operations System (LMOS) to ANSI T1.227/228 Standard Attribute Mapping; and Qwest / MEDIACC Electronic Bonding Trouble Administration - WFA/C to ANSI T1.227/228 Standard Attribute Mapping.

The following findings address specific Arizona TSD objectives:

- Qwest processes, intervals and communications activities conducted during the development of an EDI, EB-TA, or Billing interface to Qwest's OSS, or implementing a Qwest IMA-GUI interface to Qwest, are carried out in accordance with the Qwest processes and procedures published and available to the CLECs. The EDI Implementation Guide provides a comprehensive description of all the processes and, to some extent, the time intervals involved in the EDI development process. Included are processes for project plan development, requirements review, circuit installation and turn-up, cooperative testing, and recertification.[12]

- Terms and definitions utilized in the EDI, EB-TA, Billing development and IMA-GUI implementation documentation are published and available to the CLECs. The EDI Implementation Guide contains a terms and definitions section that explains most terms. Because EDI by and large is governed by standards and standards bodies such as X-12, UN/EDIFACT, and TCIF (for telecom), Qwest documents refer CLECs to these organizations for clarifications and definitions.

- The CLECs and the Pseudo-CLEC could readily obtain documentation relating to building an interface and/or configuring service to the Qwest EDI, EB-TA, Billing and IMA-GUI interfaces. The documentation was clear, accurate, and sufficient to build the interface. All of Qwest's technical specifications and developer-level instructions for CLECs to use to build EDI interfaces are contained in the EDI Disclosure Document (a separate one issued for each EDI release) and the EDI Developer Worksheets.

---

[12] The release of EDI design documents is being negotiated through the Change Management Process re-design effort. At the beginning of the process Qwest proposed that it would adhere to the OBF 2233 standard which calls for the release of draft design documentation 66 calendar days prior to a release and final documentation 45 calendar days prior. This topic has not reached consensus among the core re-design team members, but the TA considers the OBF proposal to be a reasonable timeframe in which to release draft and final design documentation. Further, because of the collaborative nature of the re-design process the TA expects that whatever decision is reached as to the timeliness of EDI documentation releases will be acceptable to the majority of the CLEC community.

- Meetings to discuss interface development were reasonably scheduled and attended by Qwest subject matter experts. Qwest's interface development meetings were found to be a strong point of its joint EDI development process.

Data definitions (i.e., form, format, content, usage and meaning) between preordering and ordering elements enable integration from pre-order transactions into order transactions without requiring translation, or reconfiguration of the data elements. Initially the TA was unable to compile a comprehensive list of specific pre-order information elements that require parsing before being used for order transactions.[13] This matter is being addressed in the CMP.

[13] With respect to integration, CLECs need pre-order information in a format that can be used to pre-populate ordering screens. Parsing preordering information into identifiable fields is an important issue. For instance, CLECs prefer that CSR information be parsed into separate fields such as customer name, address, installed features, etc. At the time of this evaluation, direction, street name, and thoroughfare are together in one field, whereas they are separate fields in the OBF standards.

Exhibit E-1 - EDI Development Process

CLEC/Qwest Project Initiation Discussions - Delineates EDI implementation objectives; provides descriptions of interfaces and an overview of the implementation process; defines a framework for identifying and distributing applicable documentation; requires determination of specific EDI transactions to be implemented.

Project Plan Development and Agreement – Requires execution of the project plan as a prerequisite for commencing development effort. A Project plan includes a review of requirements; circuit configuration/design/installation; test data development; interoperability testing; certification testing; and production turn-up. Includes CLEC/Qwest project manager responsibilities for adhering to plan and provisions for changes to plan.

Requirements Review – Provides assistance to CLEC for:

- Development and definition of business processes and procedures to support use of IMA-EDI interface.
- Development of documentation (i.e., methods and procedures) to support CLEC use of the IMA-EDI interface.
- Performing database "gap analysis" to ensure that required, optional, and conditional data fields within the EDI transactions can be successfully populated.
- Identifying and determining data inputs.
- Defining relevant CLEC internal business processes.
- Review of Qwest's EDI requirements, as provided in EDI Disclosure Document; enumeration detailed EDI requirements on a product-by-product basis:
  - Business Description - Provides general overview of the product, outlines dependencies and constraints, and describes the Ordering and Billing Forum (OBF) forms to be used when ordering specific products.
  - Business Model - Describes complete transaction cycle for a specified product, and transactions exchange sequence.
  - Trading Partner Access Information - Outlines data values for ISA/GS segments; describes delimiter use; indicates the "standards" version upon which a transaction is based
- Syntax and Structure – Provides EDI transaction sets; describes individual EDI segments and elements contained within particular transaction sets; developer worksheets define business rules and data values.
- Developer Worksheets - Provide Qwest business rules enabling CLEC to correctly generate Qwest EDI requests; summarizes business rules for each field in the interface by order form; description of OBF forms and the rules as to use of each field.

- Circuit Installation - Order placement for a dedicated circuit to connect to Qwest data center (either in Denver, Colorado, or Omaha, Nebraska) prior to establishing EDI connectivity; specification of bandwidth requirements depending upon the projected number of concurrent user interfaces with system. (Options include T-1, fractional T-1, or 56k dial-up line.) and test cases; use of Qwest Scenario Summary and Scenario Order/Pre-order Templates to outline scenarios to be tested, expected responses and actual test scenario data to be used for the EDI transaction. [10]
- Interoperability Testing - Interoperability testing to ensure connectivity and verification of operational gateway software is operational; validation of results of EDI development, ensuring that CLEC can successfully/correctly generate EDI transactions, and receive/correctly process EDI responses from Qwest systems.
- Certification Testing - Validates ability of CLEC to transmit EDI data that completely meets "X12" protocol standards and complies with all Qwest business rules; controlled submission of "true account" information to Qwest production environment; treatment of orders as "production orders" to certify operational readiness.
- Migration and Recertification Pursuant to New EDI Release Implementation – Six-month migration requirement to new release before the old one is retired. [11]
- Documentation - EDI/interface development documentation review encompassing: EDI Implementation Guidelines; IMA/EDI Recertification Document; EDI Disclosure Document; IMA 6.0 Release Notes; Release 5.0 to 6.0 Change Summary; 12 Release Schedule; and IMA Target Release Lifecycle. No problems were encountered with the documentation, per se. Redesign of Qwest's website facilitated navigation for document access and search capability.

[10] Although these orders do not pass through to Qwest's production environment and will not be provisioned, the use of real customer data in these test scenarios was required. All interoperability orders are subjected to the same edits as a production order. Therefore, in order to submit successful orders during interoperability testing, valid account data initially had to be supplied and used by the CLEC. The desire to obviate the need for "real data" prompted development of a Stand Alone Test Environment, as discussed in Section 8.0 of this report.

[11] If CLEC migrates from one version to the next without any new products or services, recertification testing is optional. If new products are involved, the CLEC must complete recertification on the new products only.

Appendix F - Comprehensive Performance Measurement Audit and Data Reconciliation Process

The PMA provided an assessment of PID processes that were established to evaluate Qwest performance in providing service to the CLECs – as distinct from Qwest's retail customers. The PID verification was intended to certify that Qwest properly collects and uses data that are the basis for performance measure results. The evaluation consisted of:

- Reviewing processes in place for collecting data.
- Computing results of performance measures.
- Evaluating performance measure data for "the three most current consecutive months" to determine if Qwest was properly computing results.
- Verifying performance measurements that were utilized within the structure of the FT and CT.

PIDs are defined as standards that Qwest must meet to comply with Section 271. Although the PMA assessed the accuracy of Qwest's PID gathering, calculating and reporting methodology, conclusions were not drawn as to whether Qwest's performance meets the requirements of the Telecommunications Act or other applicable laws or regulations. Rather, recommendations were intended to improve the calculation of, and reporting, within Arizona either through the revision of existing performance measures or the implementation of additional performance measures.

The PMA was designed to provide the ACC with a statistically valid assessment of Qwest's performance in providing service to the CLECs, based on established PIDs. The audit began in August of 2000 and was conducted in phases. The results of the analysis were provided in the *Performance Measurements Audit - Final Report* (PMA-FR) dated December 21, 2001. The examination was conducted in accordance with the MTP and TSD.[14] This audit complied with General Accounting Office (GAO) procedures and guidelines, and was purportedly the most comprehensive audit conducted on any ILEC's reporting of performance measurements to date.[15]

Performance measurements fall into the following categories:

- "Parity" measures the degree to which parity access for competing CLECs has been achieved through Qwest's OSS.
- "Benchmarks" define a level of performance for service provided to a CLEC for which there is no equivalent retail function within Qwest.
- The "Report-Only" category is provided for measures that the ACC deemed to be of interest but which are used only for diagnostic purposes, often because they serve

[14] The audit also conformed to the Arizona Performance Measurements Process Audit Plan (PMPAP), dated May 23, 2000. Prior to the start of the PMA, the TAG approved the PMPAP.

[15] The resultant final report of this auditing engagement is an "opinion" on the part of the independent practitioner, CGE&Y, on whether Qwest's reporting of performance measurements was accurately presented in all material respects. The PMA-Final Report reflected CGE&Y's evaluation.

as back up other performance measurements. The Report-Only category also includes measures for which there was not yet sufficient information or demand to establish a Benchmark.

The evaluation of Qwest's PIDs was comprised of four components: PID process review; historical evaluation; FT Evaluation; and CT Evaluation. A description of the test and implementation phases is provided in Exhibit F-1,which describes audit coverage and scenarios, test plan, entrance and exit criteria, roles of participants. The extensive roles and responsibilities of the participants are described in Exhibit F-2. They reflect the exhaustive process and highly interactive nature of the PMA.

Source transactions were transmitted to Qwest's Performance Analysis System (PANS), a database warehouse that stored performance information from a variety of systems.[16] Once in PANS, transactions were subjected to additional selection criteria, summarized, reviewed and, in some cases, modified in accordance with the Qwest's performance measurement group requirements. Summarized data were uploaded to an Oracle database, whereupon a "report writer" performed final calculations and provided the data to CLECs and the ACC electronically.

In accordance with its "Statement of Generally Available Terms (SGAT)," Qwest provided results of the PIDs listed in Appendices B and C of that document. The ACC, with CLEC and Qwest input, established final performance measurement criteria (Benchmarks) for Qwest in the OSS workshops. SGAT Appendices B and C are summarized in the following paragraphs.

- Appendix B contains detailed descriptions of Qwest's performance measurements. Each page lists: (1) the "indicator number" for the measurement, (2) the name of the measurement, (3) the purpose of the measurement, (4) a detailed description of the measurement, (4) the formula used to compute the result of the measurement, (5) relevant notes and explanations, and (6) the measurable standard for the measurement.

- Appendix C lists the PMs and indicates which were included in the FT and CT evaluation. FT measures encompassed both "OSS functionality testing" and "end-to-end functionality testing."

- Measurements considered during the FT and CT were included in the PMA to verify that Qwest collected adequate data and computed accurate results.

Key milestones and critical path items for the success of the project is provided in Exhibit F-3, reflecting the major milestones associated with the PMA.

---

[16] PANS provided access to Qwest data that supported external compliance reporting to regulatory bodies and to CLECs, as well as for Qwest's internal use.

Exhibit F-1 - Performance Measurement Audit
Description and Implementation Phases

Coverage and Scenarios	PMA included both an evaluation of the processes and procedures that Qwest had in place for collecting data and computing the results of the performance measurements listed in Appendices B & C. The evaluation encompassed the three most current consecutive months of data for those performance measurements. The PMA incorporated: ➢ Data Collection Process Review - An evaluation of the process and procedures in place to verify that data were being collected and used in a proper fashion when computing performance measures. This entailed: examination of documentation; evaluating Qwest's data collection, analysis and reporting processes based on Performance Indicators Definition (in Appendix B); interviewing Qwest personnel; and clarifying discussions with CLEC representatives, as appropriate. ➢ Historical Data Evaluation - An examination of performance measurement data from the most recent three-month period to determine if Qwest was correctly computing the results. The purpose was to determine the validity of Qwest's performance measurement reporting through analysis of Qwest's calculations, using the input data employed by Qwest, and to determine whether analysis of these data warranted different conclusions. This encompassed: • Reviewing the calculation of performance measurements; • Calculation of results independently, using data provided by Qwest; • Calculating z-statistics for performance measurements • Comparing calculated z-statistics with those computed by Qwest. • Determining the extent that Qwest's historical data was consistent with the Performance Indicators Definition in Appendix B. ➢ Functionality and Capacity Test Performance Measurements - PMs listed in Appendix C of the TSD were evaluated for purposes of the Functionality and Capacity Tests. For each test, data were collected for the performance measures with a "yes" entry in the applicable section of the table. The table identified the performance measures for the Functionality Test as either "OSS Performance" or "End-to-End." This distinction clarified the role of the performance measure during test evaluation.
Test Plan	Review of Data Collection Process - Qwest provided explanations and documentation of its PM process and procedures. The TA validated this process and procedures and monitored Qwest's ability to execute them. When appropriate, the TA conducted interviews with Qwest and/or CLEC personnel. The PM Process review conducted by the TA addressed the following issues: ➢ Sufficiency of Qwest's documented performance measures business rules, gathering methods and procedures to ensure that the data elements gathered are accurate and complete. ➢ The degree to which Qwest data gathering or calculation processes are manual. The sufficiency of documentation of Qwest manual data gathering and calculation processes to ensure completeness, proper disaggregation, and accuracy. ➢ Qwest performance measure process documentation containing proper information which maps data elements needed to compute each performance measure to a specific Qwest system. ➢ Consistency of Qwest documented data gathering and exclusion business rules with the PID. ➢ Performance of Qwest calculations as defined in the PID. ➢ Adequacy of Qwest supervisory review process documentation and practices to ensure that calculation of compliance is in place and the continuing accuracy of such calculations. ➢ Sufficiency of documented Qwest change control procedures that are in place to ensure that changes to data are tracked and available for review.

	➢ The extent to which Qwest Performance Measurement Report Version Control Process is documented, sufficient and practiced. ➢ Availability of historical logs for changes to reported performance measures. ➢ The extent to which procedures for changing data include appropriate change/version control; the consistency of these procedures, as documented, with the PID. ➢ Performance Measurement Reports available on the Qwest web-site. Qwest's plans to post Performance Measurements on its web-site. Availability of clearly written posting processes and change management processes documentation and practice. Historical Data Evaluation - Qwest provided performance measurement raw data for a three consecutive month period. The TA validated the process and procedures and monitored Qwest's ability to execute them. When appropriate, the TA conducted interviews of Qwest and/or CLEC personnel. Functionality Testing and Capacity Testing - During Functionality Testing and Capacity Testing, Qwest provided appropriate performance measure data and results. The Test Administrator verified such data and incorporated the results into Functionality Testing and Capacity Testing. The TA acquired or developed data, calculated Functionality and Capacity test results, and validated results of Qwest, Pseudo-CLEC and CLEC analyses.
Entrance Criteria	Entrance criteria for this test included the Qwest documented processes and procedures for the enumerated performance measurements listed in Appendices B and C.
Exit Criteria	Exit criteria included a final report that PM collection, analysis and reporting processes, reviewed by the TA, were fully compliant with the performance measurements contained in the PID. Exiting this test included a review session where all observed activities, data and results were reviewed for validity. The actual exit criteria comprised an "Outcome Report" generated by the TA detailing observations regarding Qwest's performance measurements.
Participants	PMA participants were the same participants as outlined in Section 4.6 for the Functionality Test with the exception that "Friendlies" were not involved. The TA performed the evaluation of the PM data and calculations provided by Qwest.

Exhibit F-2 - Performance Measurement Audit
Roles and Responsibilities

ACC Staff	Overseeing the development of the tests; overseeing the test process; defining the scope of the tests; providing approval of baseline documents, including the MTP; appointing the test supervisor to oversee day-to-day activities; reviewing the TA Test report and Pseudo-CLEC report and providing comment; making decisions on issues for which there is not agreement among parties, including issues escalated to the ACC by the TAG; and submitting Reports and making recommendations to the ACC.
DCI	Acting with/for the ACC to establish the draft and final Master Test Plan; providing ongoing counsel and technical support to the ACC throughout the testing process; maintaining communications among all interested parties and managing the flow of information among parties as directed or approved by Commission Staff; apprising the Third Party Test Administrator and the Commission Staff of its communications with all parties or TAG participants on a weekly basis and any conclusions reached; and assisting the ACC in overseeing the test process and in evaluating test results and recommendations
Test Administrator	Provided PMA oversight. Specifically, the TA: ➢ Provided final input to the Master Test Plan, including development and validation of: Functional Test coverage and scenarios; Parity Test coverage and scenarios; Capacity Test coverage and scenarios; Change Management methods and processes; and Scalability of Qwest systems and personnel resources. ➢ Ensured that Qwest is following established business rules, and accurately collecting data and computing performance measurement results. ➢ Monitored test sites and activities, the test planning schedule, test execution schedule, overall project schedule and baseline documents. ➢ Prepared test planning schedule, test execution schedule, and overall project schedule. ➢ Tracked testing action items. ➢ Assigned accountabilities and track resolution of issues/problems identified. ➢ Collected test status from Qwest, Pseudo-CLEC and participating CLECs and reported status to the ACC. ➢ Provided day-to-day supervision of the test program, including supervision of Friendlies. ➢ Analyzed test results. ➢ Submitted a report of results and its evaluation to the ACC, explicitly describing results of each of the individual tests (e.g. functionality, capacity, etc.) and its evaluation for each, as well as overall results and overall evaluation. ➢ Provided technical advice to all test participants. ➢ With the TAG, ensured that testing was conducted in such a way as to achieve blindness to Qwest. ➢ Maintained the level of openness in its contacts with Qwest specified in Exhibit F and submitted to the TAG and ACC, on a bi-monthly basis, a report of its incidental contacts with Qwest.
Participating CLECs	Input to the final MTP, through the TAG; input to the test specifications; input to the test execution plans; support for test execution; and provision of test support and SMEs as necessary to the TA.
Pseudo-CLEC	All the responsibilities of the participating CLECs above. In addition: ➢ Built an application-to-application OSS interface necessary for the testing (based upon baseline documentation provided by Qwest). ➢ Reviewed and evaluated Qwest documentation of EDI, IMA and EB-TA interfaces. ➢ Documented the relative ease or complexity of creating the interface. ➢ Electronically submitted pre-order inquiries, service order request (LSRs), associated trouble reports, and other transactions through Qwest OSS interfaces. ➢ Received various Qwest confirmations, jeopardy notices, completion notices and

	responses back from querying the various OSS functions. ➢ Built the capability to deliver and receive a volume of transactions, including local service requests (LSRs), and trouble reports to allow for functionality and capacity testing of the Qwest OSS systems, including manual processes when electronic processes fail, or as designed and specified in the Master Test Plan. ➢ Provided test results data to the TA for evaluation. (The Pseudo-CLEC did not engage in evaluation of test results.) ➢ Maintained the level of openness in its contacts with Qwest as set forth in Exhibit F and submitted to the TAG and ACC on a bi-monthly basis a report of its incidental contacts with Qwest.
Qwest	Direct participant in the test. Qwest provided: ➢ Input to the final Master Test Plan. ➢ The OSS environment to be used for the test. ➢ Subject matter expertise in a collaborative development effort with the Pseudo-CLEC, with the CLECs, with the Test Administrator and with the ACC. ➢ Technical specifications and resources to be used by the Pseudo-CLEC for establishment as a pseudo-CLEC and for customization of the transaction generation software. ➢ Personnel to input orders for cases specified in the MTP according to established methods and procedures on the retail side of the Retail Parity Test. ➢ Support of the testing effort at the direction of the ACC. This support included many organizations within Qwest, which performed tasks such as the day-to-day management of the supporting team, root cause analysis, production data and systems SME support, etc.
TAG	Conduct of bi-monthly, and event related conferences, either by in-person meetings or teleconferences to inform all participants of testing progress and current status. ➢ Periodically reviewed test results and offered advice and observations, and provided input to the test process. ➢ Facilitated CLEC participation in the test process. ➢ Participated in the Change Management process. ➢ Reviewed instances of reported exceptions and other issues as they arose. Attempted to resolve disputed issues by consensus. ➢ As necessary, escalated exceptions to the ACC for decisions on whether or not to retest. ➢ Escalated unresolved issues to the ACC for decisions. ➢ Accepted participant input on any matters related to testing, directed it to the cognizant parties, and, processed input as described in the preceding bullet-points. ➢ The TAG, through the Test Administrator, monitored test plans to ensure, as much as practical, that the test process was blind to Qwest. ➢ The TAG adopted a Change Control Process that was applied for the Master Test Plan, as well as to the PIDs and the TSD.

Exhibit F-3 - Summary of Key Milestones and Critical Path Items in the Performance Measurement Audit

- Draft Arizona OSS Test Plan Submitted to ACC for review
- Draft OSS Test Plan Finalized by ACC
- Draft Arizona OSS Test Plan Distributed to Qwest and CLECs
- Draft Arizona OSS Test Plan presented at 1st Workshop
- Request For Proposal Distributed to Vendors (includes draft Arizona OSS Test Plan)
- Responses from Vendors Due to ACC
- Vendors Selected and Contract Signed
- Pseudo CLEC Startup and TA Ramp-up Process
- Pseudo CLEC Information Gathering & Training
- Development of test transaction generator
- Test Planning, including definition of Test Bed and Test Cases
- Test Preparation, including Test Bed Implementation and mapping Test Accounts to Test Cases
- Performance Measurement Process Evaluation
- Performance Measurement Historical Data Evaluation
- Test Standard Document Completion
- Functionality Test Execution
- Retail Comparison Test Execution
- Capacity Test Execution
- Test Analysis and Reporting